SAMS COMPUTERFACTS™ CC5

COMPUTER : ATARI 400™

TECHNICAL SERVICE DATA FOR YOUR COMPUTER

PRELIMINARY SERVICE CHECKS

This data provides the user with a time-saving service tool which is designed for quick isolation and repair of computer malfunctions.

Check all interconnecting cables for good connection and correct hook-up before making service checks.

Disconnect all peripherals except the monitor from the computer to eliminate possible external malfunctions.

Replacement or repair of the Power Board, RF Modulator, Keyboard, CPU Board, 16K RAM Board, Main Board or connectors may be necessary after the malfunction has been isolated.

CC5 ATARI MODEL 400

GENERAL OPERATING INSTRUCTIONS

POWER UP

With a Basic cartridge plugged in, the computer will come up ready to program in Basic when turned On. See "Cassette Operation" for instructions on loading and saving programs on a cassette recorder.

To run a program, type RUN and press the RETURN key.

To stop a program, press the BREAK key or press the SYSTEM RESET key.

CASSETTE OPERATION

Connect the ATARI Program Recorder to the connector on the right side of the computer. NOTE: a regular cassette tape recorder will not function with the ATARI 400.

To load a program, type CLOAD and press the RETURN key. The speaker will beep once. After the speaker beeps, press the PLAY button on the recorder and press the RETURN key again. The program will then be loaded.

To save a program, type CSAVE and press the RETURN key. The speaker will beep twice. After the speaker beeps, press the PLAY and RECORD buttons on the recorder and press the RETURN key. The program will then be saved.

SAMS™ **Howard W. Sams & Co., Inc.**
4300 West 62nd Street, P.O. Box 7092, Indianapolis, Indiana 46206 U.S.A.

The listing of any available replacement part herein does not constitute in any case a recommendation, warranty or guaranty by Howard W. Sams & Co., Inc., as to the quality and suitability of such replacement part. The numbers of these parts have been compiled from information furnished to Howard W. Sams & Co., Inc., by the manufacturers of the particular type of replacement part listed.

Reproduction or use, without express permission, of editorial or pictorial content, in any manner, is prohibited. No patent liability is assumed with respect to the use of the information contained herein.
© 1984 Howard W. Sams & Co., Inc.
4300 West 62nd Street, P.O. Box 7092, Indianapolis, Indiana 46206 U.S.A.
Printed in U.S. of America. 84CF14910 DATE 8-84

PRELIMINARY SERVICE CHECKS (Continued)

SERVICE CHECKS

SEE INTERCONNECTING DIAGRAM, PLACEMENT CHART, AND PHOTOS TO MATCH THE NUMBER IN THE CIRCLES WITH THOSE IN THE FOLLOWING DATA FOR SERVICE CHECKS TO BE PERFORMED.

① RF MODULATOR CHECK

(A) Apply power to computer and set Power Switch (S203) to On. Verify the Power Indicator LED (CR210) is lit. NOTE: If LED CR210 is not lit, refer to the "Power Supply Check" section.

(B) Verify the Channel Select Switch (S201) is on the same channel as the monitor, channel 2 or 3.

(C) Verify the TV/Computer Switch (In Switch Box) is in the computer position.

(D) Check for bad connections and improper hook-up at the monitor and at the computer.

(E) If the computer still does not come up with power applied, check the voltages at the RF Modulator connection points. If the voltages are correct, substitute the RF Modulator.

② POWER SUPPLY CHECK

(A) Connect Power Pack to 120V AC. Disconnect connector P204 from computer. Check for 10.42V AC at connector P204. If the voltage is not correct, substitute the Power Pack.

(B) Check for 11.84V at Bridge Rectifier Diodes (CR206 and CR208).

(C) Check for 5.08V at pin 3 of Voltage Regulator IC (A202).

(D) Check for 23.7V at pin 1 of Voltage Regulator IC (A201).

(E) Check for 12.25V at pin 3 of IC A201.

(F) Check for −5.01V at the anode of Zener Diode CR201.

If any of the voltages are missing (B) thru (F) substitute the Power Board.

③ MAIN BOARD

(A) Power supply checks out properly, but the computer does not come up with power applied. Verify the 3.579575MHz Crystal (X101) is oscillating at the proper frequency.

(B) Crystal X101 oscillation is correct, but the computer still does not come up. Check the CPU Board and the 16K RAM Board by substitution.

(C) If the computer still does not come up, check ROM IC's (A103 and A104), Video Buffer IC (A111), and Decoder IC's (Z103 and Z104) by substitution.

(D) Computer comes up properly, but the cartridge does not work. Check ROM IC (A105) by substitution.

(E) Joysticks or paddles do not function. Check PIA IC (A102) by substitution.

(F) Computer comes up improperly with power applied. Check Decoder (Z105) by substitution.

(G) No color, no vertical or horizontal sync, or no audio. Check the CPU Board by substitution.

(H) Computer will not load or save a program to or from cassette. Check POKEY IC (A101) by substitution.

④ KEYBOARD

(A) A key does not function. Substitute the keyboard.

(B) Several keys do not function properly. Check the Keyboard Connector (J105) and check POKEY IC (A101) and Decoder IC's (Z101 and Z102 by substitution.

TEST EQUIPMENT AND TOOLS

TEST EQUIPMENT

Digital Volt/Ohm Meter

TOOLS

Phillips Screwdriver
IC Insertion Tools (14, 16, 24 and 40 pin)

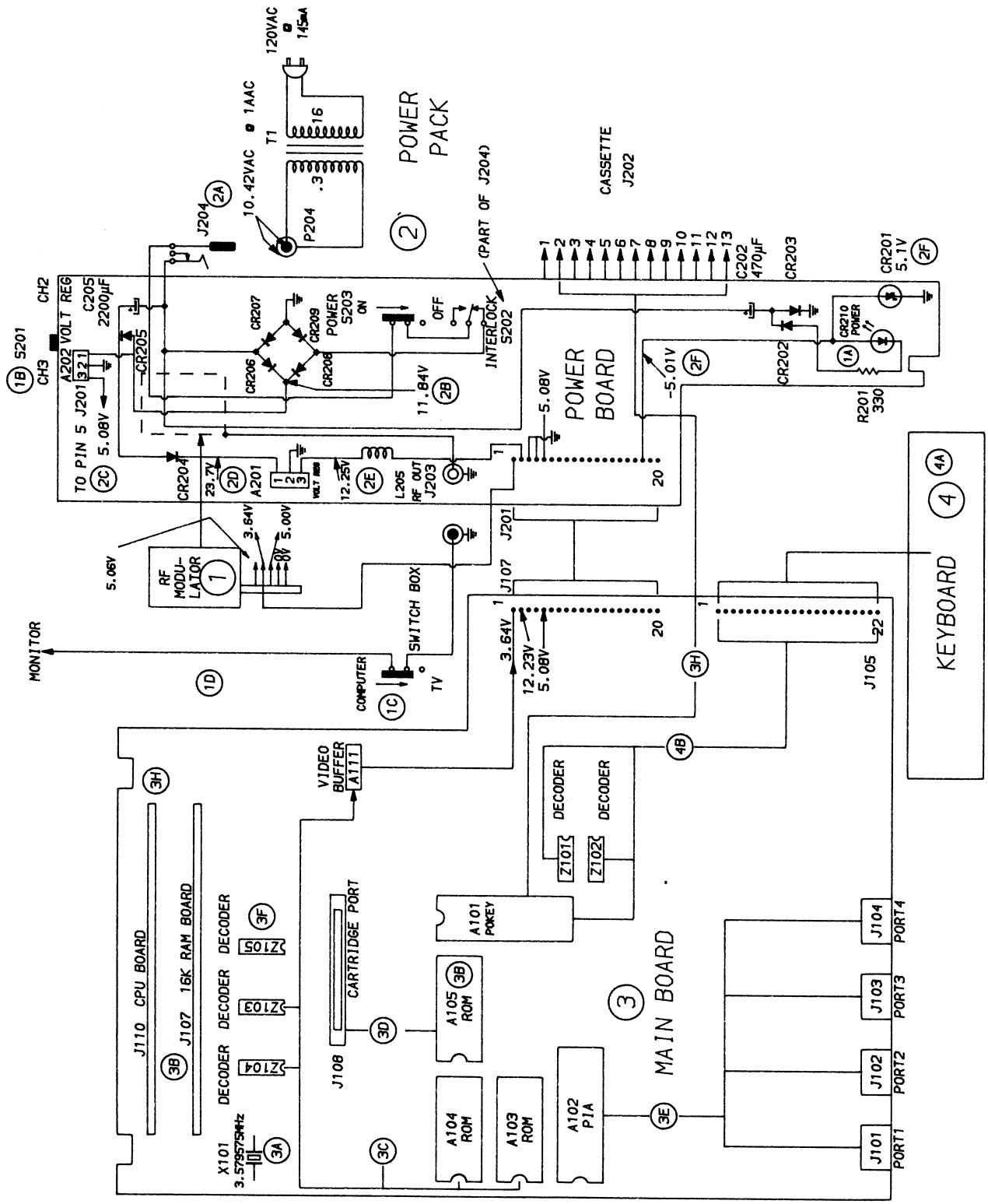

INTERCONNECTING DIAGRAM

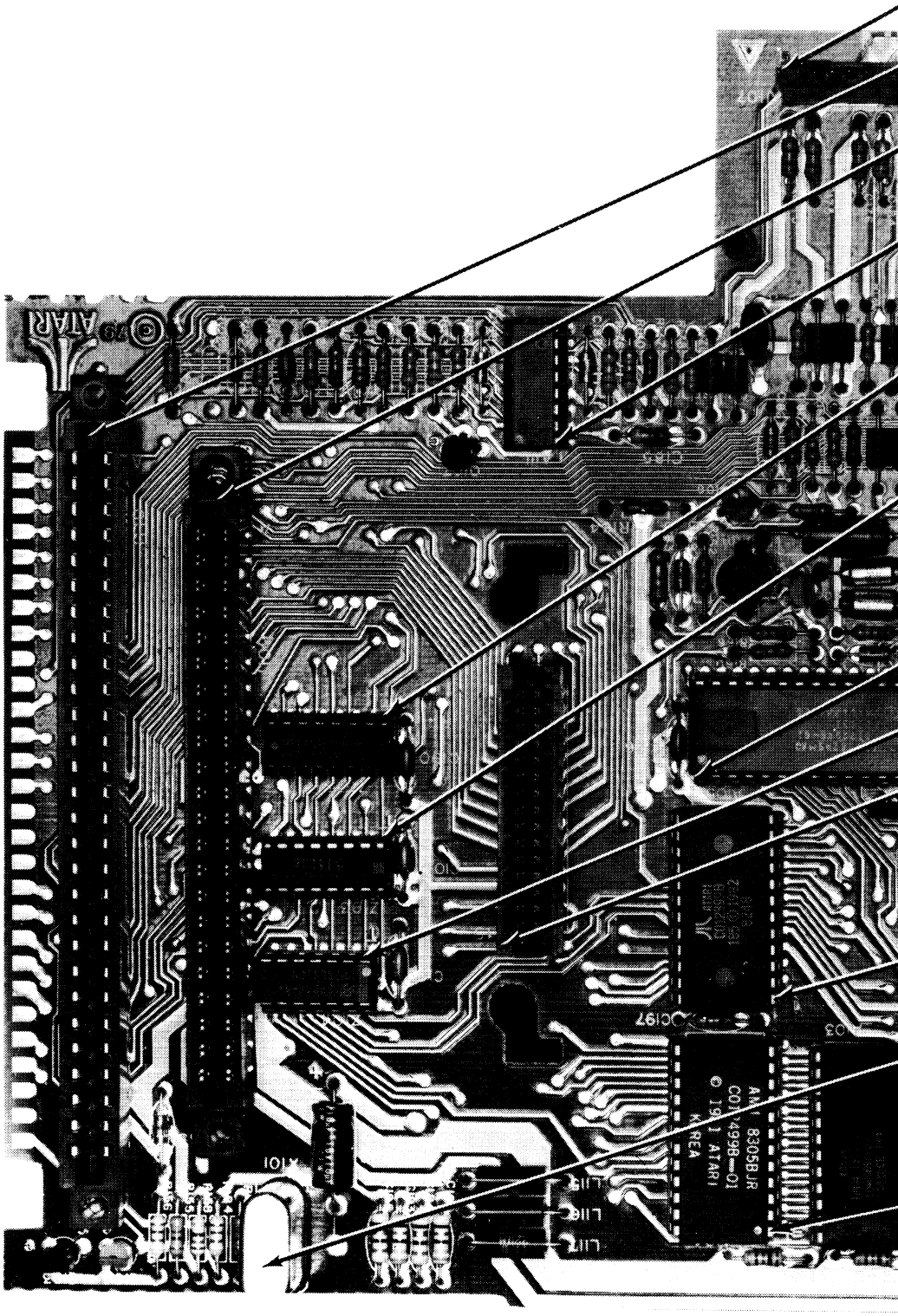

MAIN BOARD

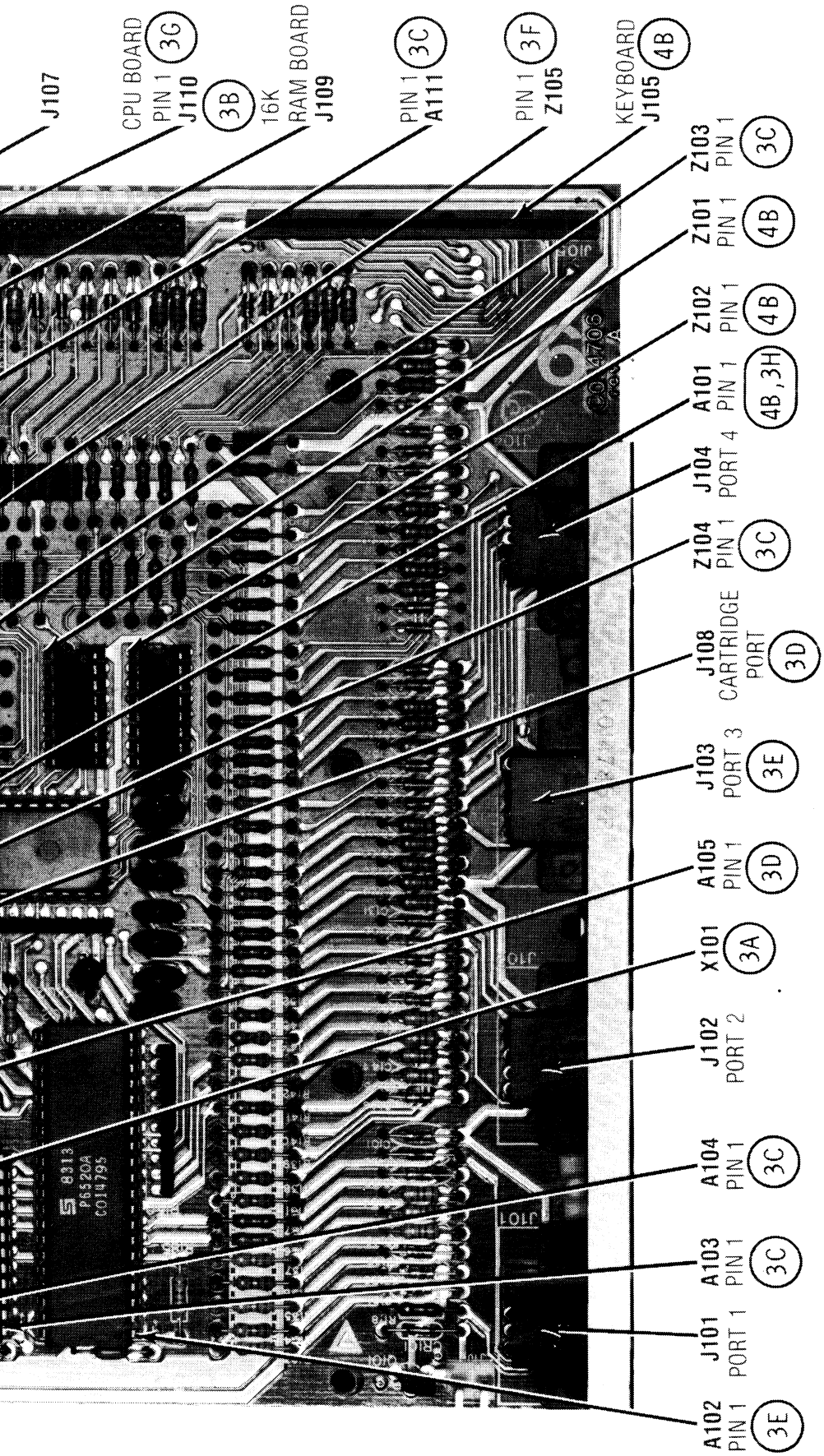
J107
CPU BOARD
PIN 1 3G
J110
3B
16K
RAM BOARD
J109
PIN 1 3C
A111
PIN 1 3F
Z105
KEYBOARD
J105 4B
Z103
PIN 1 3C
Z101
PIN 1 4B
Z102
PIN 1 4B
A101
PIN 1 4B,3H
J104
PORT 4
Z104
PIN 1 3C
J108
CARTRIDGE
PORT 3D
J103
PORT 3 3E
A105
PIN 1 3D
X101 3A
J102
PORT 2
A104
PIN 1 3C
A103
PIN 1 3C
J101
PORT 1
A102
PIN 1 3E

PRELIMINARY SERVICE CHECKS (Continued)

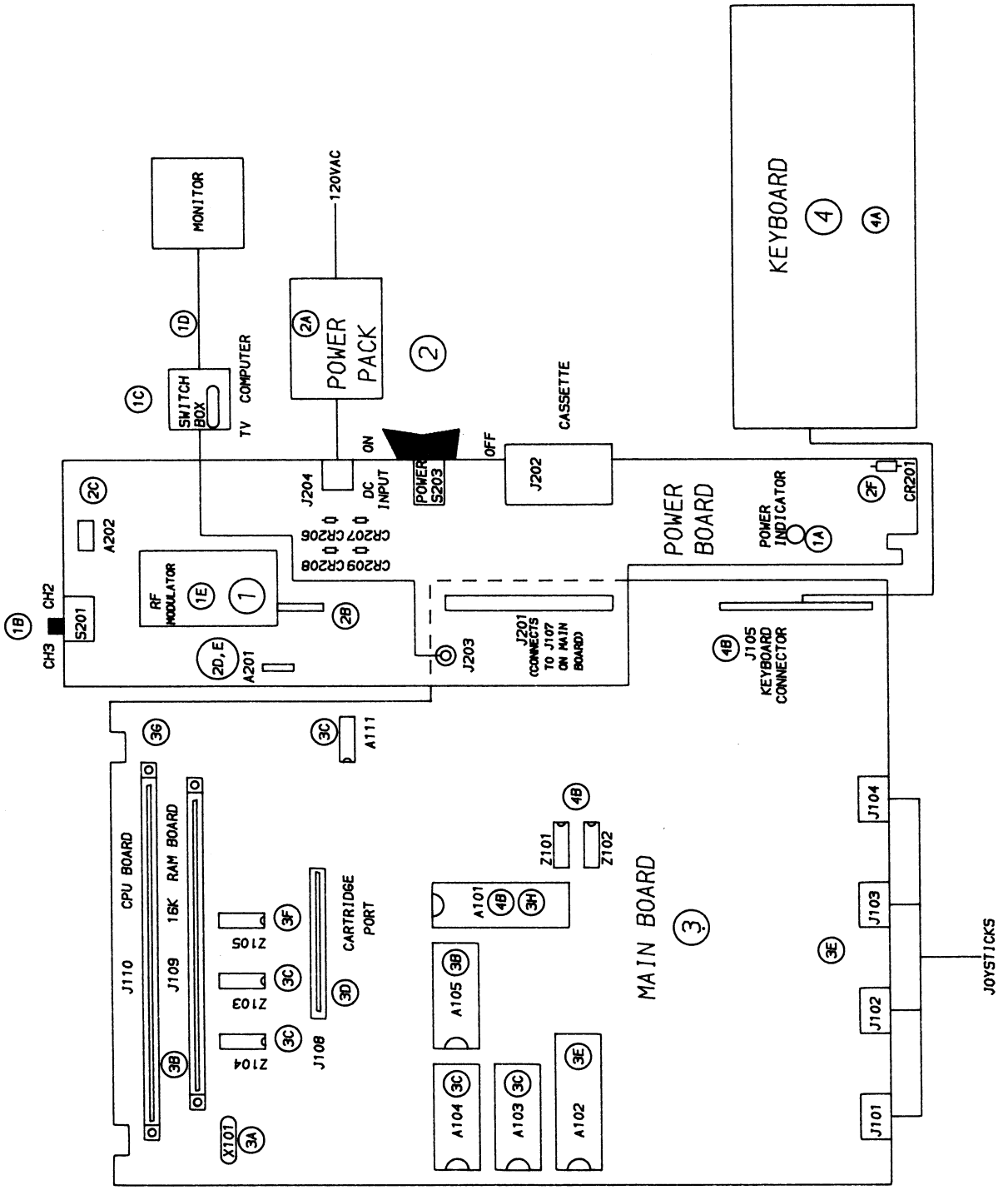

PLACEMENT CHART

PRELIMINARY SERVICE CHECKS (Continued)

DISASSEMBLY INSTRUCTIONS

CABINET REMOVAL

Remove four screws from the bottom, open the cartridge door and remove the top cabinet. Unplug the RF modulator cable and remove the bottom of the cabinet.

SHIELD REMOVAL

Remove Phillips screws 1 and 2 and lift up and remove the cartridge door On-Off switch lever 3, see Figure 1. Lift up and remove the Power Board. Remove eight Phillips screws from the bottom of the shield and remove the top and bottom shield.

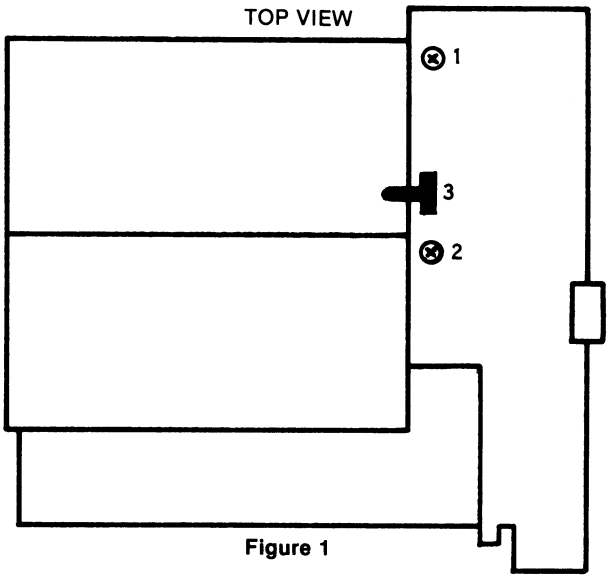

Figure 1

MISCELLANEOUS ADJUSTMENTS

Suggested Alignment Tools:

	GC ELECTRONICS
L101, L210	9300, 9302, 9304

SOUND ADJUSTMENT

Connect a pickup loop to the input of a Frequency Counter and slip the loop over L101. Adjust L101 for a frequency of 4.5MHz.

RF MODULATOR ADJUSTMENT

Set a TV on channel 2 or 3 with the AFC Off. Set the computer Channel Switch (S201) to the same channel and adjust L210 for the best picture.

COLOR ADJUSTMENT

Turn On the computer and adjust the Color Adjust Control (R309) for a blue screen on the monitor.

REPLACEMENT PARTS

ITEM NO.	TYPE NO.	NUMBER ON UNIT
A101		CO12294B-01
A102	P6520A	CO14795
A103		CO14599B-01
A104		CO12499B-01
A105		CO12399B
A111	CD4050BEXV	
	CD4050	CO10816-XX
Z101, Z102	CD4051BEXV	
	CD4051	CO14336
Z103	SN74LS42NDS	
	74LS42	
Z104	DM74LS10N	
	74LS10	CO14341
Z105	SN74LS138N	
	74LS138	CO14344

PRELIMINARY SERVICE CHECKS (Continued)

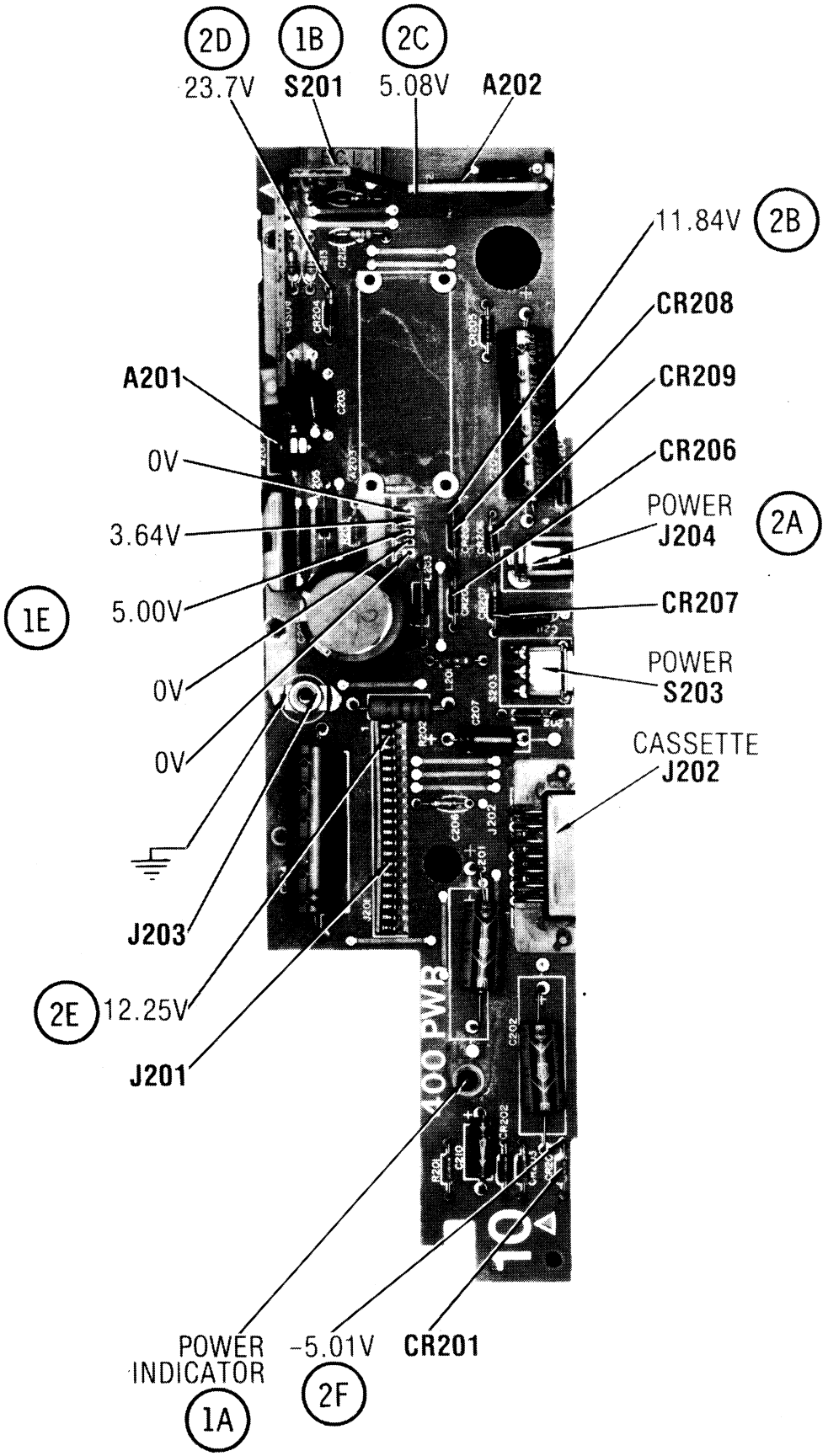

POWER BOARD

CC5 ATARI MODEL 400

MODEL 400

PRELIMINARY SERVICE CHECKS

ENCLOSED

SAFETY PRECAUTIONS

See page 8.

INDEX

	Page
Adjustment	7
Block Diagram	26
Disassembly Instructions	8
General Operating Instructions	5
GridTrace Location Guide	
CPU Board	17
Main Board	18
Power Board	18
Line Definitions	26
Logic Chart	23,24
Parts List	13 thru 16
Photos	
CPU Board	12,17
Main Board	9,10,19,20
Photos (Continued)	
Power Board	11
RF Modulator Board	16
16K RAM Board	21
Safety Precautions	8
Schematics	
IC Pinouts & Terminal Guides	4,25
Main Board, CPU Board, 16K RAM Board & RF Modulator Board	27,28,29
Main Board & CPU Board	2
Power Supply	3
Schematic & Logic Chart Notes	22
Troubleshooting	5,6,7

SAMS™ Howard W. Sams & Co., Inc.
4300 West 62nd Street, P.O. Box 7092, Indianapolis, Indiana 46206 U.S.A.

The listing of any available replacement part herein does not constitute in any case a recommendation, warranty or guaranty by Howard W. Sams & Co., Inc., as to the quality and suitability of such replacement part. The numbers of these parts have been compiled from information furnished to Howard W. Sams & Co., Inc., by the manufacturers of the particular type of replacement part listed.

Reproduction or use, without express permission, of editorial or pictorial content, in any manner, is prohibited. No patent liability is assumed with respect to the use of the information contained herein.
© 1984 Howard W. Sams & Co., Inc.
4300 West 62nd Street, P.O. Box 7092, Indianapolis, Indiana 46206 U.S.A.
Printed in U.S. of America. 84CF14910 DATE 8-84

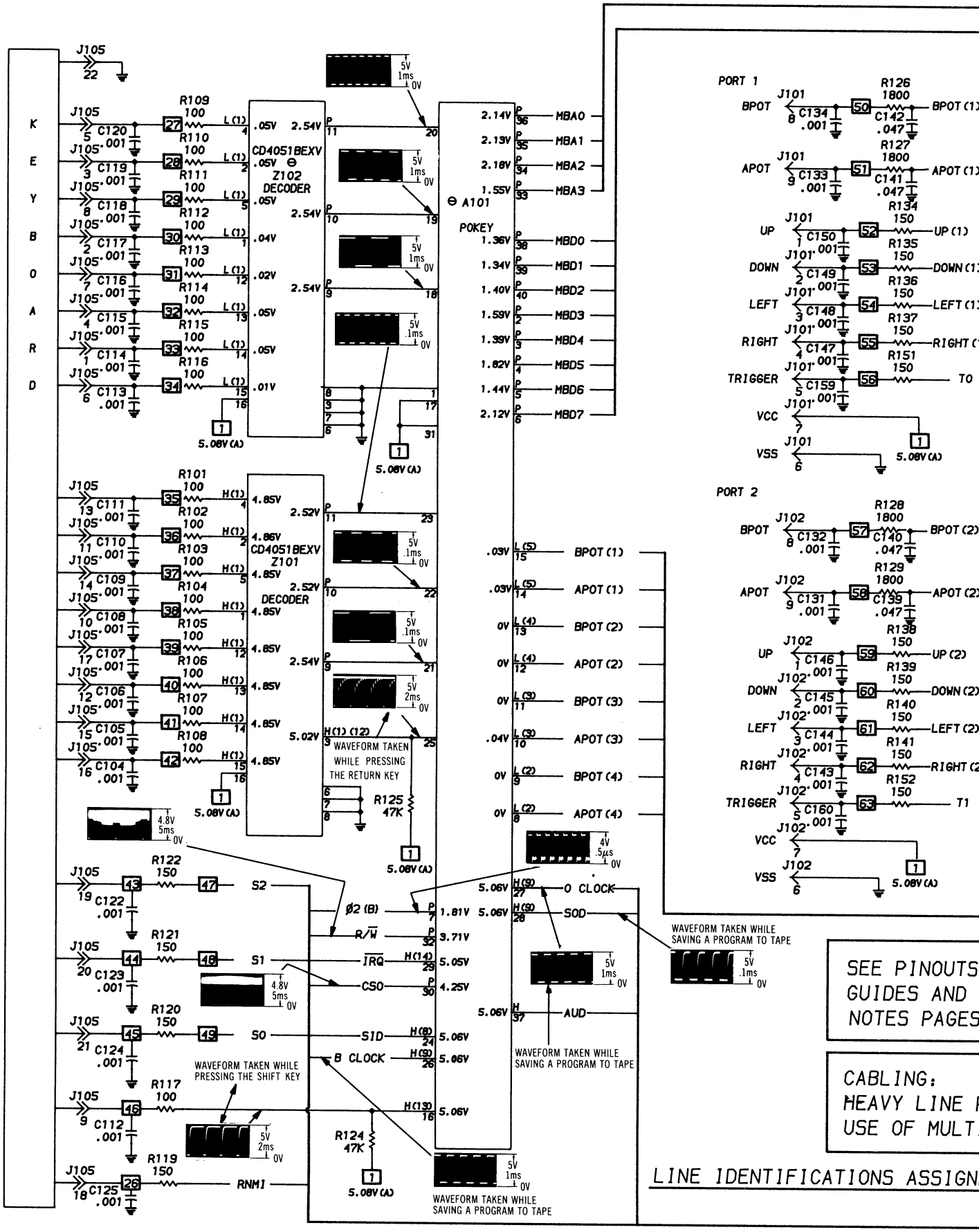

A PHOTOFACT STANDARD NOTATION SCHEMATIC WITH CIRCUITRACE™

© Howard W. Sams & Co., Inc. 1984

MAIN BOARD & CPU BOARD

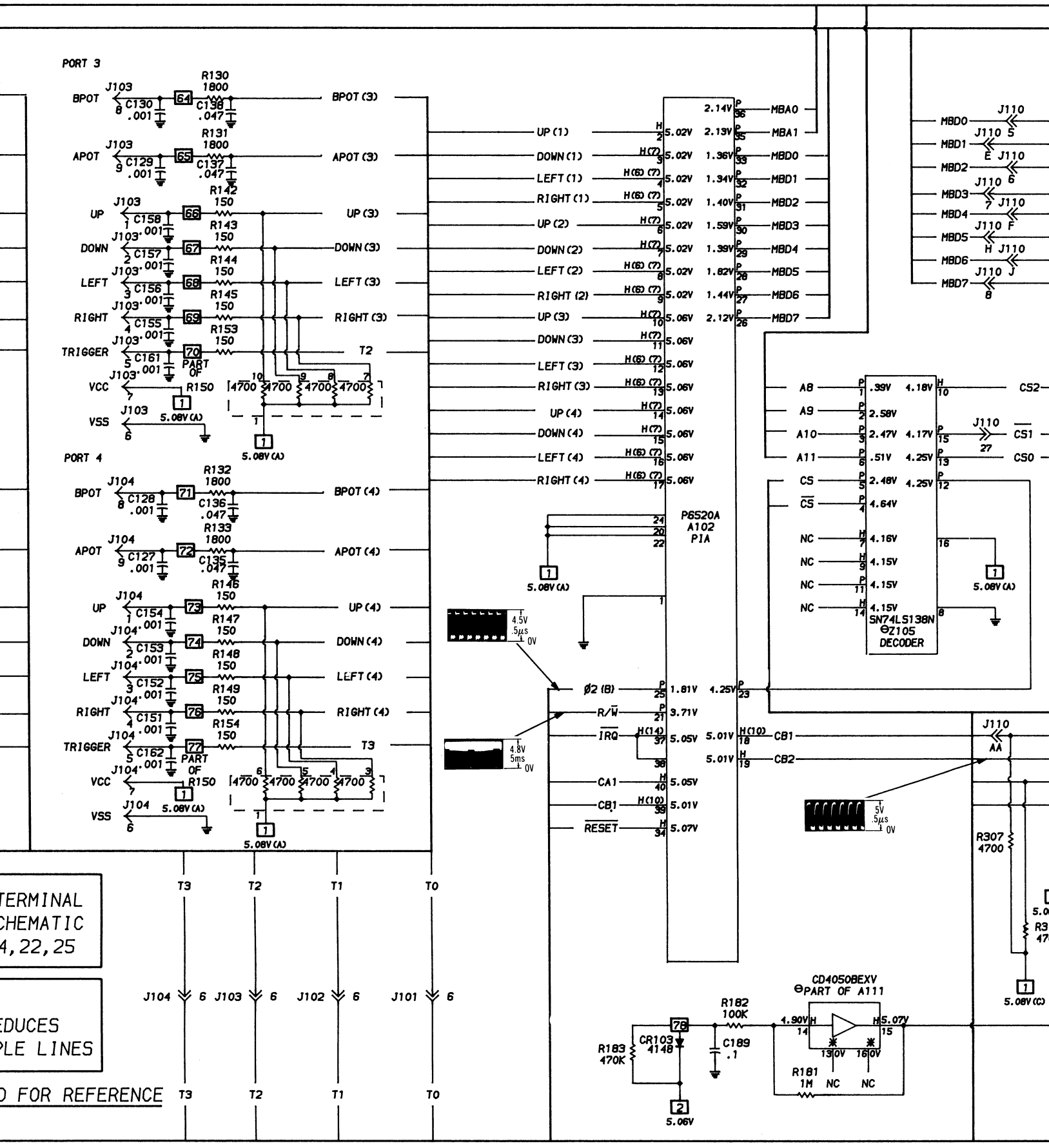

SEE LINE DEFINITIONS ON PAGE 26

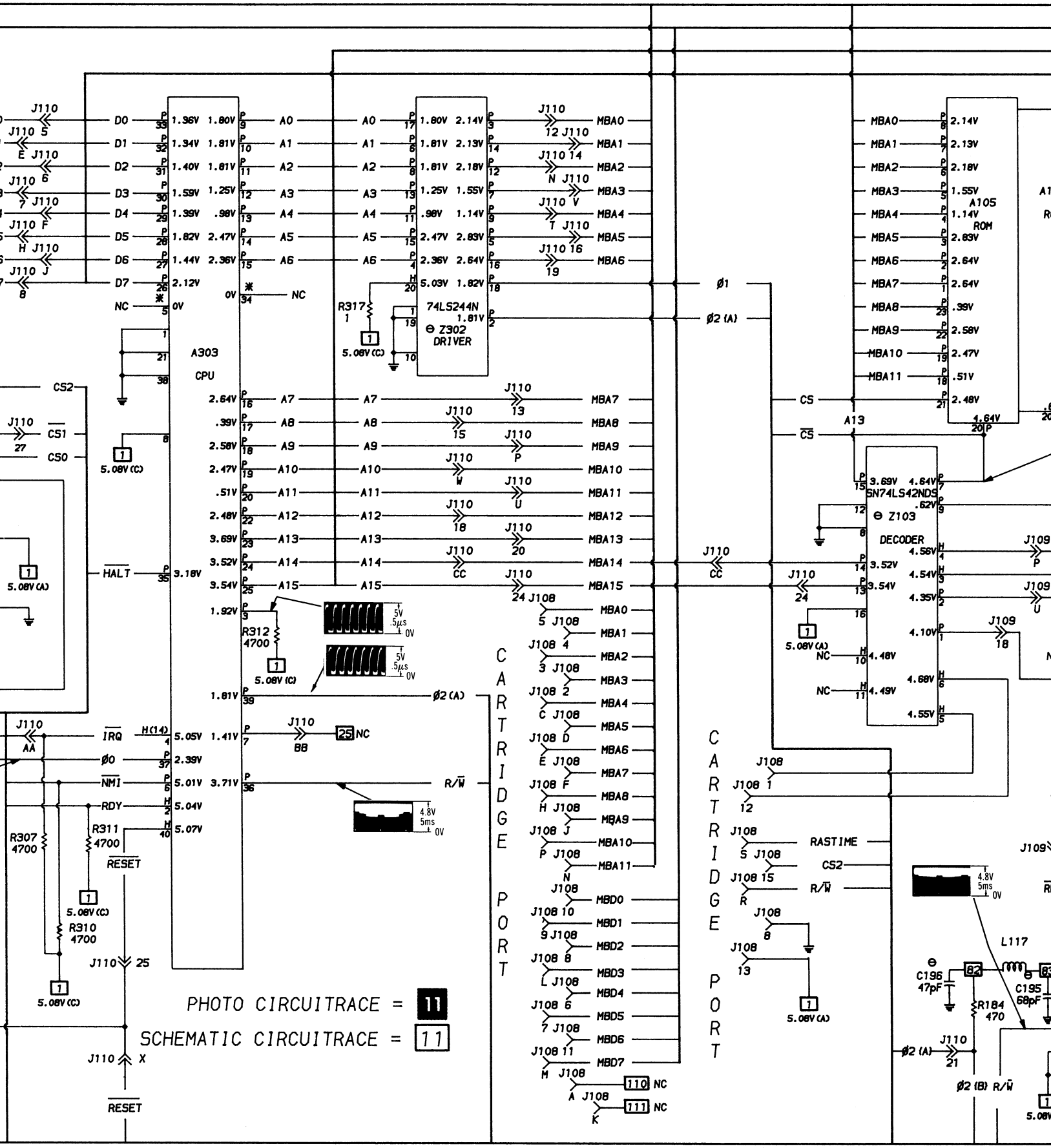
A303
CPU
74LS244N
Z302
DRIVER
A105
ROM
SN74LS42NDS
Z103
DECODER
CARTRIDGE PORT
CARTRIDGE PORT
PHOTO CIRCUITRACE = 11
SCHEMATIC CIRCUITRACE = 11

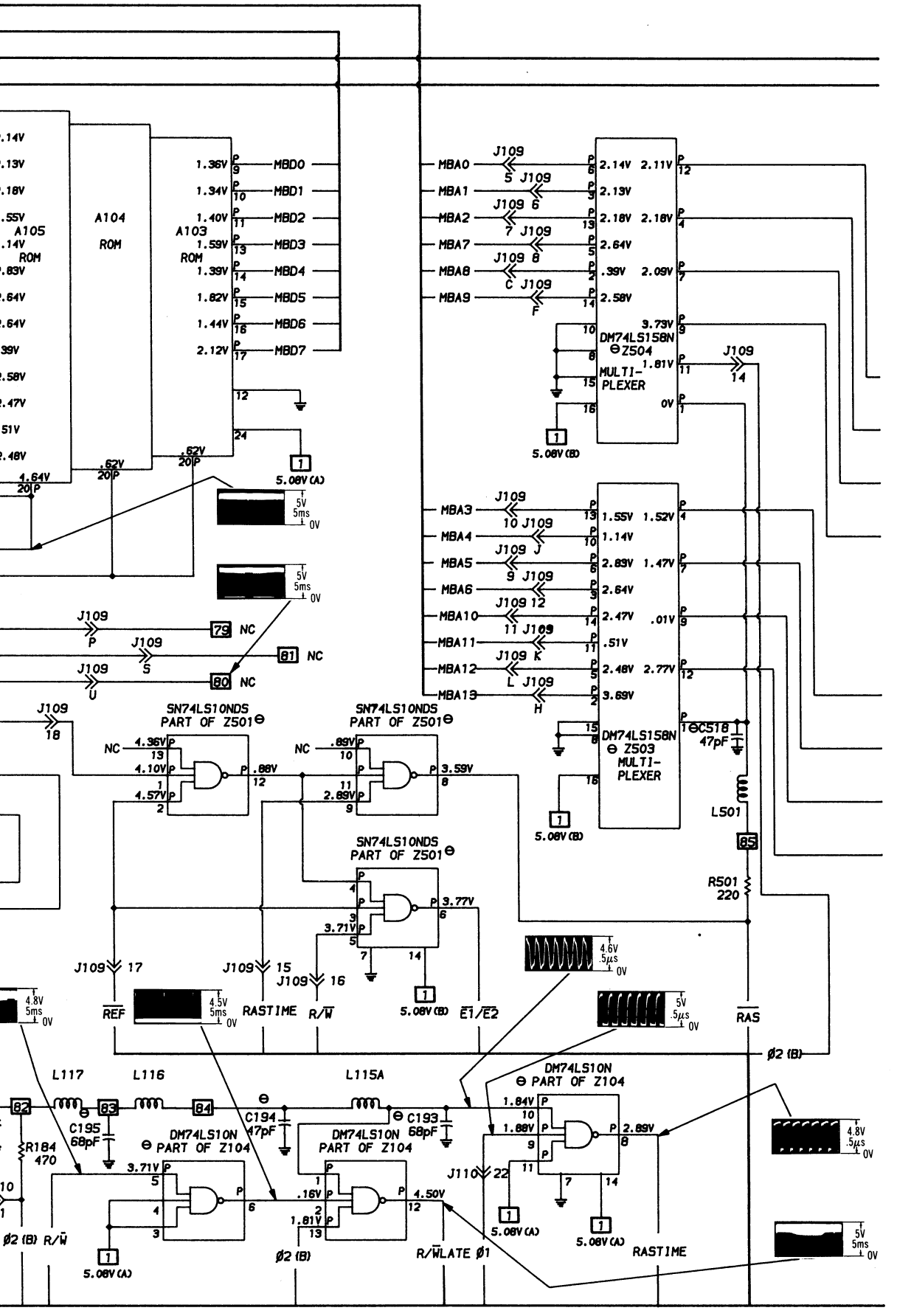

ATARI MODEL 400

MAIN BOARD & CPU BOARD

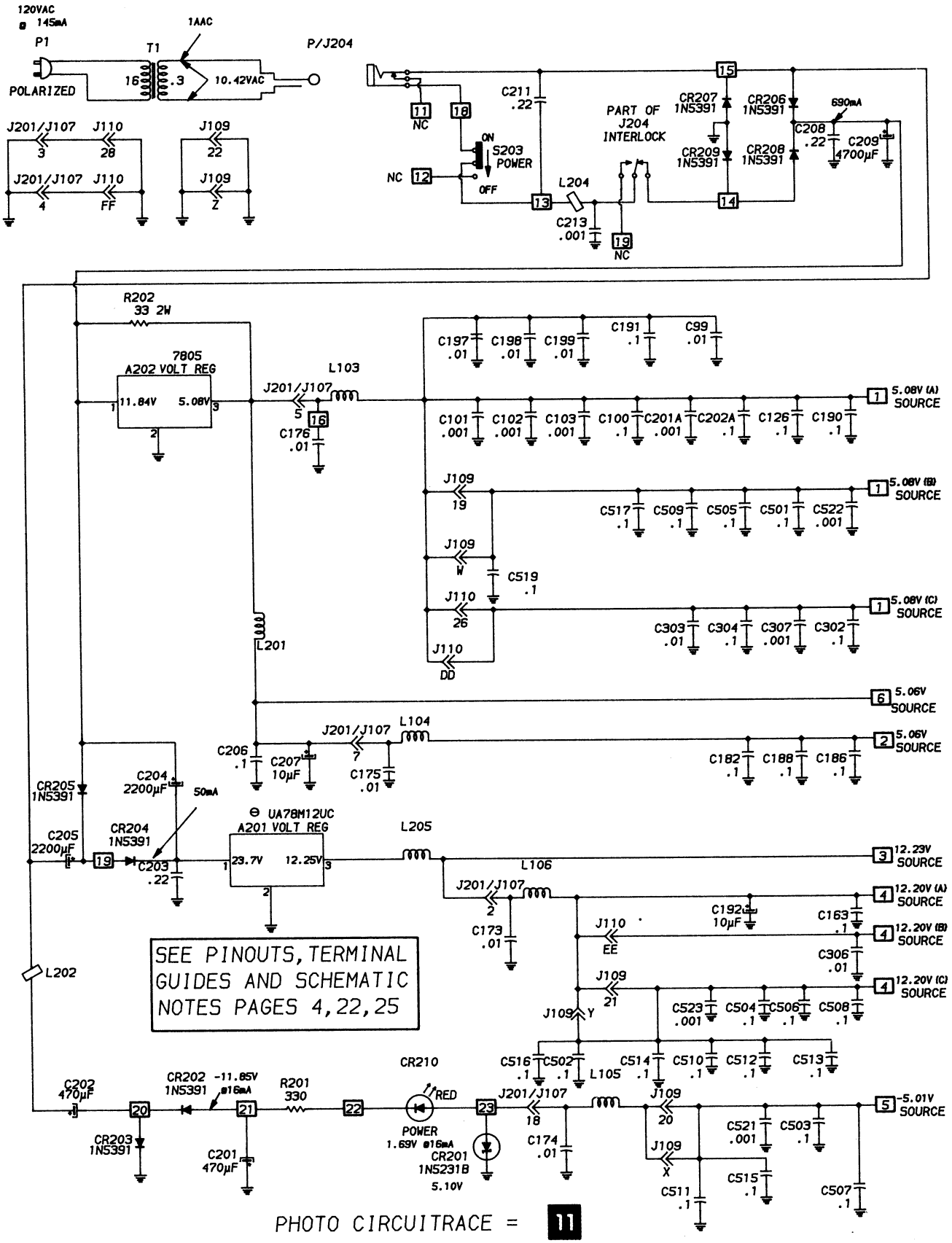

PHOTO CIRCUITRACE = 11

SCHEMATIC CIRCUITRACE = 11

A PHOTOFACT STANDARD NOTATION SCHEMATIC WITH CIRCUITRACE™

© Howard W. Sams & Co., Inc. 1984

POWER SUPPLY

IC PINOUTS & TE

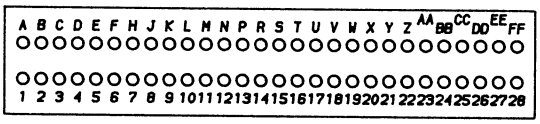

J110
WIRE VIEW

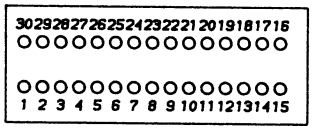

J108
WIRE VIEW

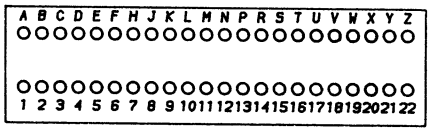

J109
WIRE VIEW

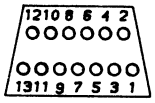

J202
WIRE VIEW

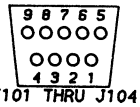

J101 THRU J104
WIRE VIEW

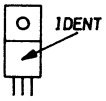

A201, A202
FRONT VIEW

Q101 THRU Q107
Q203
BOTTOM VIEW

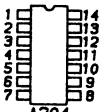

A204
TOP VIEW

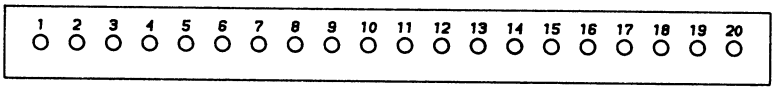

J201
WIRE VIEW

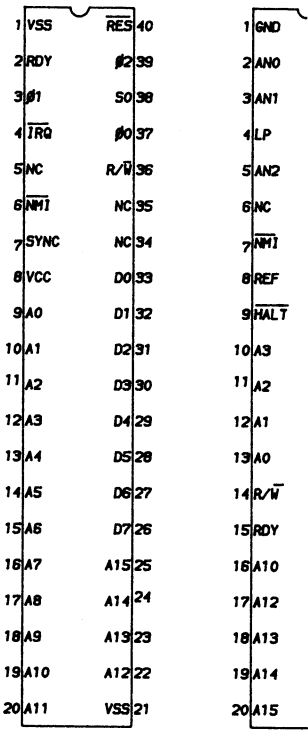

A303
CPU
TOP VIEW

A30
ANT
TOP V

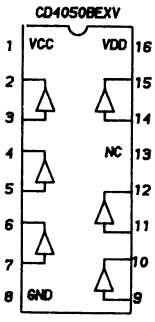

A111
LOGIC LEVEL
CONVERTER
TOP VIEW

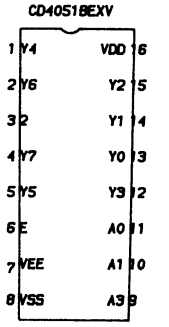

Z101, Z102
1 OF 8 DECODER
AND LEVEL CONVERTER
TOP VIEW

GENERAL OPERATING INSTRUCTIONS

POWER UP

With a Basic cartridge plugged in, the computer will come up ready to program in Basic when turned On. See "Cassette Operation" for instructions on loading and saving programs on a cassette recorder.

To run a program, type RUN and press the RETURN key.

To stop a program, press the BREAK key or press the SYSTEM RESET key.

CASSETTE OPERATION

Connect the ATARI Program Recorder to the connector on the right side of the computer. NOTE: a regular cassette tape recorder will not function with the ATARI 400.

To load a program, type CLOAD and press the RETURN key. The speaker will beep once. After the speaker beeps, press the PLAY button on the recorder and press the RETURN key again. The program will then be loaded.

To save a program, type CSAVE and press the RETURN key. The speaker will beep twice. After the speaker beeps, press the PLAY and RECORD buttons on the recorder and press the RETURN key. The program will then be saved.

TROUBLESHOOTING GUIDE

POWER SUPPLY

10.42V AC missing from the cathode of Diode CR207 to the cathode of Diode CR209. Check the Interlock Switch (S202), Power Switch (S203), Capacitor C211, Ferrite Bead L204, Jack J204 and check the Power Transformer (T1).

11.84V missing at pin 1 of Voltage Regulator IC (A202). Check Diodes CR206 thru CR209, Capacitor C208, Electrolytic C209 and check for possible shorts to ground.

5.08V missing at pin 3 of IC A202. Check for possible shorts to ground and check IC A202.

23.7V missing at pin 1 of Voltage Regulator IC (A201). Check Diodes CR204 and CR205, Capacitor C203, Electrolytics C204 and C205, and check for possible shorts to ground.

12.25V missing at pin 3 of IC A201. Check IC A201 and check for possible shorts to ground.

– 11.85V missing at the anode of Diode CR202. Check Diodes CR202 and CR203, Electrolytics C201 and C202, and check for possible shorts to ground.

– 5.01V missing at the anode of Zener Diode CR201. Check Zener Diode CR201, Power LED (CR210), Resistor R201 and check for possible shorts to ground.

SYNC

No vertical or horizontal sync. Check the waveform at pin 25 of the CTIA IC (A301). If the waveform is missing, check IC A301 by substitution. If the waveform is correct, check the voltages and waveforms associated with the Sync Buffer, pins 4 and 5 of IC A111 and check Resistor R176.

CPU OPERATION

Verify the CPU is functioning by using a logic probe to check for pulses on the data lines, pins 26 thru 33 of the CPU IC (A303) and the address lines, pins 9 thru 20 and 22 thru 25 of IC A303. If the CPU is not functioning, check for 5.08V at pin 8 of IC A303. If 5.08V is missing, refer to the "Power Supply" section of this Troubleshooting guide.

Check the waveform at pin 37 of IC A303. If the waveform is missing, check the waveform at the collector of Clock Transistor (Q104).

If the waveform at the collector of Transistor Q104 is missing, check the voltages and components associated with Clock Transistors (Q103 and Q104).

If the waveform at the collector of Transistor Q104 is good, check the waveform at pin 30 of the CTIA IC (A301). If the waveform is missing, check IC A301 by substitution.

If the clock waveform at pin 37 of IC A303 is good, check the logic probe readings on pins 2, 3, 4, 6, 7, 34, 38, 39 and 40 of IC A303. See the Logic Chart for the correct readings.

CRYSTAL OSCILLATOR

Verify the operation of the Oscillator Crystal (X101) by connecting the input of a frequency counter to the collector of Clock Transistor (Q104). The frequency should read 3.579575MHz.

COLOR

Video with no color. Check for a color waveform at pin 21 of the CTIA IC (A301). If the waveform is missing, check the adjustment of the Color Adjust Control (R309). The voltage at pin 17 of IC A301 should vary from about 7V to 0V as Control R309 is adjusted from MINIMUM to Maximum. If the voltage does not change, check Control R309, Capacitor C305, Resistor R308, 12.20V source and check IC301 by substitution.

If there is no problem with Control R309, check the waveform at pin 28 of IC A301. If the waveform is missing, check the logic probe readings on pins 1 thru 40 of the ANTIC IC (A302) and check IC A302 by substitution.

If the waveform at pin 21 of IC A301 is good, check the voltages, waveforms and components associated with the Color Transistor (Q107). If the colors are not correct, check the adjustment of Control R309 and check the frequency of the 3.579575MHz oscillator at pin 28 of IC A301.

TROUBLESHOOTING GUIDE (Continued)

VIDEO

No video. Check for a video waveform at pin 1 of Jack J201. If the waveform is good, check the RF Modulator. If the waveform is missing, check the waveforms and voltages on the Video Buffers, pins 2, 3, 6, 7 and 9 thru 12 of IC A111 and the Sync Buffer, pins 4 and 5 of IC A111. The waveforms on the outputs of the buffers should be the same as the waveforms on the inputs.

If any waveform is missing at the output of a buffer, check IC A111. If any waveform is missing at the input of a buffer, check the connections at Jack J110 pins 1, 2, 3, B and M. Check the voltages, waveforms and logic probe readings on pins 1 thru 40 of the CTIA IC (A301) and check IC A301 by substitution.

AUDIO

No sound from the internal speaker when a key is pressed. Check the Speaker SP101. If the speaker checks correctly, type in and run the following program:

10 PRINT CHR$(253): GOTO 10

Check for .7V peak to peak pulses at pin 15 of CTIA IC (A301). If the pulses are missing, check IC A301 by substitution. If the pulses are present, check for .5V peak to peak pulses at the base of Audio Transistor (Q101). If the pulses are missing, check the connection at pin S of Jack J110, Resistor R123, Capacitor C121 and Transistor Q101. If the pulses are present, check Transistor Q101, Diode CR101, Resistor R118 and 5.08V source.

If the computer does not produce sound from the monitor, type in and run the following program:

10 SOUND 0,100,10,15: GOTO 10

Check for the waveform shown in Figure 1 at pin 37 of the POKEY IC (A101). If the waveform is missing, check IC A101 by substitution. If the waveform is correct, check the frequency of the Sound Oscillator (Q105). The frequency should be 4.5MHz. If Transistor Q105 is not functioning properly, check the voltages and components associated with Transistor Q105. If Transistor Q105 is functioning, check Resistors R161 and R164, and Capacitors C164 and C183.

The program just typed in works, but the computer does not produce the proper sounds when used with other programs that have sound. Check IC A101 by substitution.

External Audio Input is not working. Check the connections at pin 11 of Jack J202 and pin 10 of Jack J201 and check the voltages and components associated with the Audio Mixer Transistor (Q106).

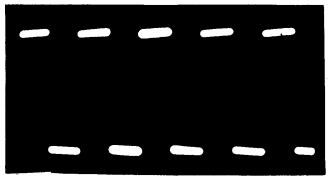

Figure 1

2.1V
2ms

0V
DC
Reference

KEYBOARD

Computer comes up with the proper display on the Monitor screen, but the keyboard does not work. Check the waveforms on pins 18 thru 23 of the POKEY IC (A101). If the waveforms are missing, check IC A101 by substitution.

If the waveforms are correct, check the waveforms on pins 16 and 25 of IC A101 and check for a pulse on pin 29 of IC A101 with a logic probe while a key is pressed. The waveform on pin 16 of IC A101 appears when the BREAK, CTRL or SHIFT key is pressed. The waveform on pin 25 appears when any key except BREAK, CTRL, SHIFT, SYSTEM RESET, OPTION, SELECT or START key is pressed. A pulse should appear on pin 29 when any key except SHIFT, CTRL, SYSTEM RESET, OPTION, SELECT or START key is pressed.

If the waveforms on pins 16 or 25 of IC A101 are missing, check the voltages and logic probe readings on pins 1 thru 16 of Decoder IC's (Z101 and Z102), see Logic Chart for correct readings. If the readings are not correct, check the IC by substitution. If the readings are correct, check the Keyboard Connector (J105) and check the keyboard switch contacts. If a pulse does not appear on pin 29 of IC A101 when a key is pressed, check IC A101 by substitution.

The START, SELECT, OPTION or SYSTEM RESET keys do not function. Check the logic probe readings on pins 12, 13 and 14 of the CTIA IC (A301) and pin 6 of the ANTIC IC (A302) while the appropriate key is pressed. See Logic Chart for correct readings. If any of the keys do not go low when the key is pressed, check the pin connections of connectors J110 and J105 and check the keyboard switch contacts. If the readings are correct, check IC's A301 and A302 by substitution.

If there is no sound from the internal speaker when a key is pressed, refer to the "Audio" section of this Troubleshooting guide.

CASSETTE SAVE AND LOAD

Computer will not save a program on tape. Type in or load a program into the computer. Save the program back on tape. See "Cassette. Operation". While saving the program, check the waveforms on pins 26, 27 and 28 of the POKEY IC (A101). If any of the waveforms are missing, check IC A101 by substitution. If the waveforms are correct, check the connections at pins 13, 15 and 16 of Jack J201 and pins 1, 2 and 5 of Jack J202.

Computer will not load a program from tape. Check for pulses at pin 24 of IC A101 while loading a program from tape. If the pulses appear, check IC A101 by substitution. If the pulses do not appear, check the connections at pin 14 of Jack J201 and pin 3 of Jack J202.

Recorder motor will not start while saving or loading a program. Type POKE 54018,52 and press the RETURN key. Check the logic probe reading on pin 39 of the PIA IC (A102). The reading should go from high to low to start the recorder motor. if the reading does not go low, check IC A102 by substitution. If the reading is correct, check Switch Transistor (Q102) and check the connections at pin 17 of Jack J201 and pin 8 of Jack J202. To turn the recorder motor Off type POKE 54018,60 and press the RETURN key.

TROUBLESHOOTING GUIDE (Continued)

PADDLES

If a paddle does not function, use the following chart to determine which pin of the POKEY IC (A101) the paddle is connected to and check the waveform on the pin.

PORT	PADDLE	A101 PIN	BUTTON	A102 PIN
1	0	14	0	4
1	1	15	1	5
2	2	12	2	8
2	3	13	3	9
3	4	10	4	12
3	5	11	5	13
4	6	8	6	16
4	7	9	7	17

The waveform should vary from the sawtooth waveform shown in Figure 2 to the pulse waveform shown in Figure 3. If the waveform is missing, check the port connector, the paddle control and check IC A101 by substitution. If a button is not functioning, use the chart to determine which pin the button is connected to and use a logic probe to check the pin while the button is pressed. The logic probe reading should go from high to low when the button is pressed. If the reading does not go low, check the button switch and the port connector. If the logic reading is correct, check the PIA IC (A102) by substitution.

The following program can be used to check the operation of the paddles.

```
10 PRINT, "PADDLE", "BUTTON"
20 FOR P=0 TO 7
30 PRINT "PADDLE"; P, PADDLE (P), PTRIG (P)
40 NEXT P
50 FOR T=1 TO 200: NEXT T
60 GOTO 10
```

On the monitor screen the number under PADDLE should vary from 228 to 1 as the paddle is varied from MINIMUM to Maximum. The number 1 under BUTTON should change to 0 when the button is pressed.

Figure 2

Figure 3

JOYSTICKS

Joysticks do not function. Check the logic probe readings on the PIA IC (A102) and the CTIA IC (A301), see the Logic Chart and note 7 for correct readings. If a pin reading does not go low when its joystick function is used, check the connector contacts on the port being used and check the joystick switches. If the readings are correct, check IC's A102 and A301 by substitution.

The following program can be used to check the operation of the joystick ports. Plug a joystick into the port being tested, type in and run the program.

```
10 PRINT, "JOYSTICK", "BUTTON"
20 FOR P=0 TO 3
30 PRINT "PORT"; P, STICK (P), STRIG (P)
40 NEXT P
50 FOR T=1 TO 200: NEXT T
60 GOTO 10
```

On the Monitor screen the number 1 under BUTTON should change to 0 when the button is pressed. The number 15 under JOYSTICK should change to the following for each position of the joystick:

UP 14	LEFT 11
DOWN 13	RIGHT 7

ADJUSTMENTS

Suggested Alignment Tools:

GC ELECTRONICS

L101, L210 ..... 9300, 9302, 9304

SOUND ADJUSTMENT

Connect a pickup loop to the input of a Frequency Counter and slip the loop over L101. Adjust L101 for a frequency of 4.5MHz.

RF MODULATOR ADJUSTMENT

Set a TV on channel 2 or 3 with the AFC Off. Set the computer Channel Switch (S201) to the same channel and adjust L210 for the best picture.

COLOR ADJUSTMENT

Turn On the computer and adjust the Color Adjust Control (R309) for a blue screen on the monitor.

DISASSEMBLY INSTRUCTIONS

CABINET REMOVAL

Remove four screws from the bottom, open the cartridge door and remove the top cabinet. Unplug the RF modulator cable and remove the bottom of the cabinet.

SHIELD REMOVAL

Remove Phillips screws 1 and 2 and lift up and remove the cartridge door On-Off switch lever 3, see Figure 1. Lift up and remove the Power Board. Remove eight Phillips screws from the bottom of the shield and remove the top and bottom shield.

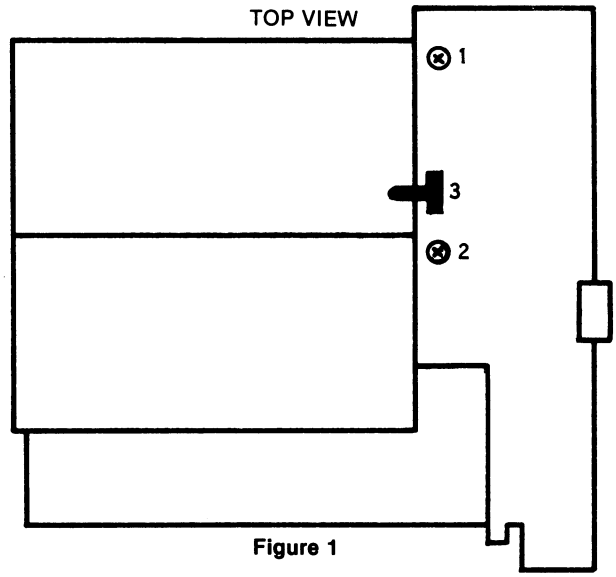

Figure 1

SAFETY PRECAUTIONS

1. Use an isolation transformer for servicing.
2. Maintain AC line voltage at rated input.
3. Remove AC power from the computer before servicing or installing electrostatically sensitive devices. Examples of typical ES deves are integrated circuits and semiconductor "chip" components.
4. Use extreme caution when handling the printed circuit boards. Some semiconductor devices can be damaged easily by static electricity. Drain off any electrostatic charge on your body by touching a known earth ground. Wear a commercially available discharging wrist strap device. This should be removed prior to applying power to the unit under test.
5 Use a grounded-tip, low voltage soldering iron.
6. Use an isolation (times 10) probe on scope.
7. Do not remove or install boards, floppy disk drives, printers, or other peripherals with computer AC power On.
8. Do not use freon-propelled sprays. These can generate electrical charges sufficient to damage semiconductor devices.
9. Periodically examine the AC power cord for damaged or cracked insulation.
10. The computer cabinet is equipped with vents to prevent heat build-up. Never block, cover, or obstruct these vents.
11. Instructions should be given, especially to children, that objects should not be dropped or pushed into the vents of the cabinet. This could cause shock or equipment damage.
12. Never expose the computer to water. If exposed to water turn the unit Off. Do not place the computer near possible water sources.
13. Never leave the computer unattended or plugged into the AC outlet for long periods of time. Remove AC plug from AC outlet during lightning storms.
14. Do not allow anything to rest on AC power cord.
15. Unplug AC power cord from outlet before cleaning computer.
16. Never use liquids or aerosols directly on the computer. Spray on cloth and then apply to the computer cabinet. Make sure the computer is disconnected from the AC power line.

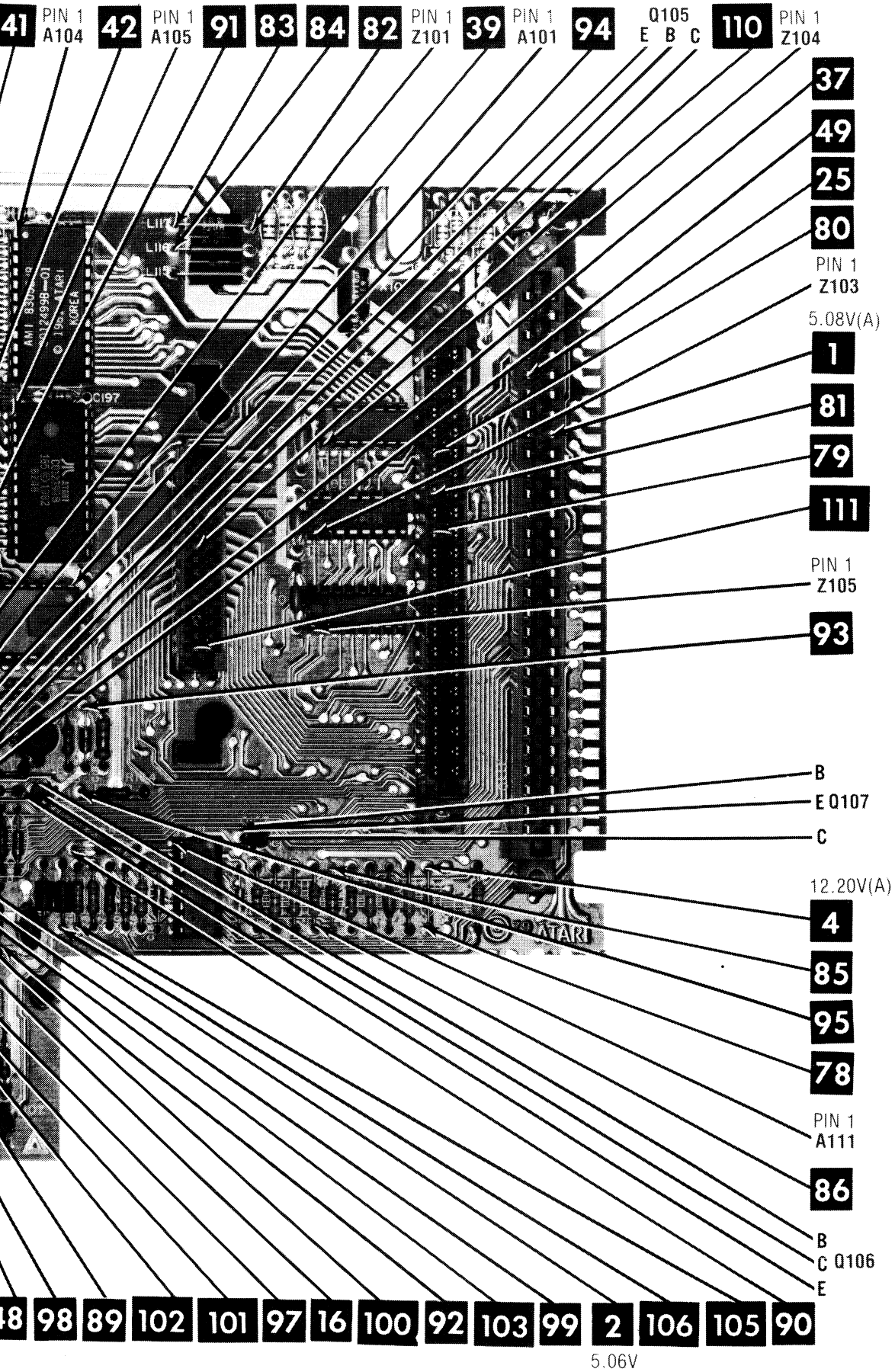

A Howard W. Sams CIRCUITRACE® Photo

MAIN BOARD

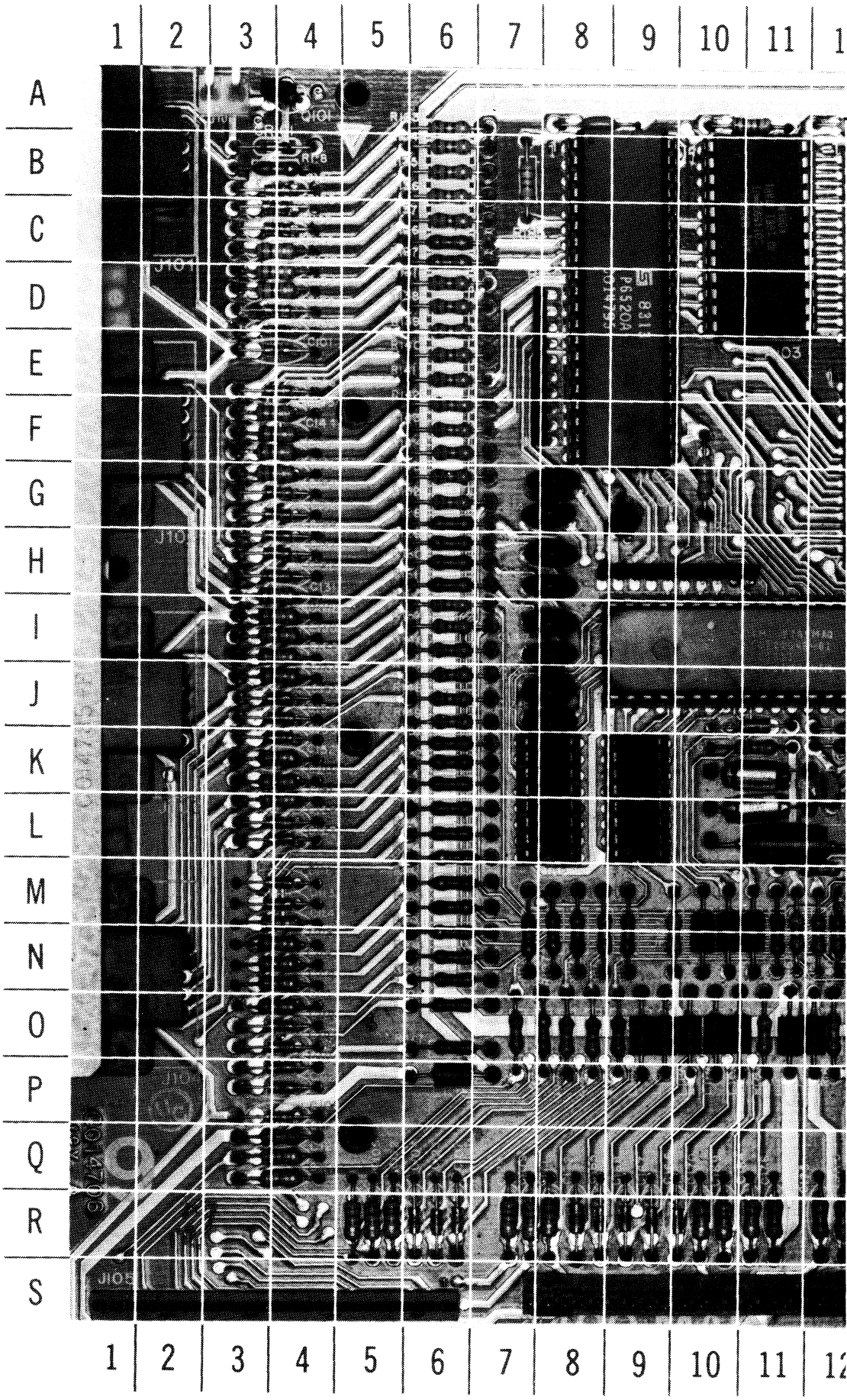

MAIN BOARD A Howard W. Sams GRIDTRACE™ Photo

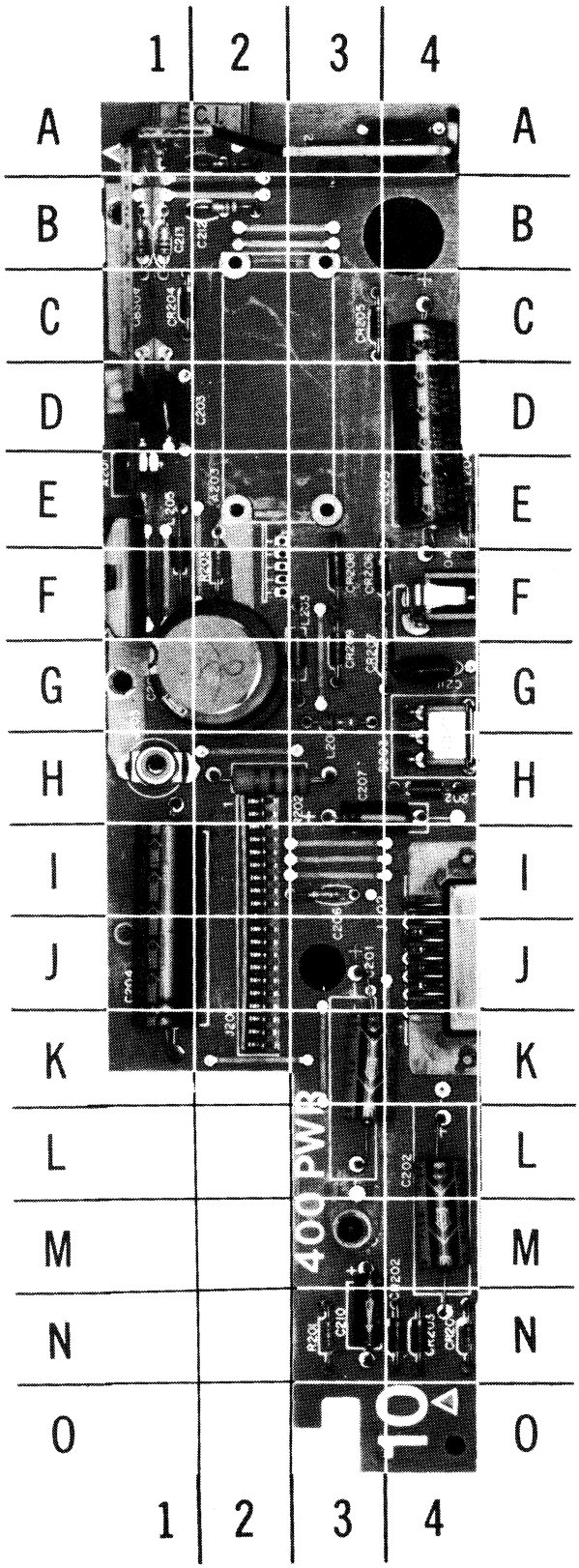

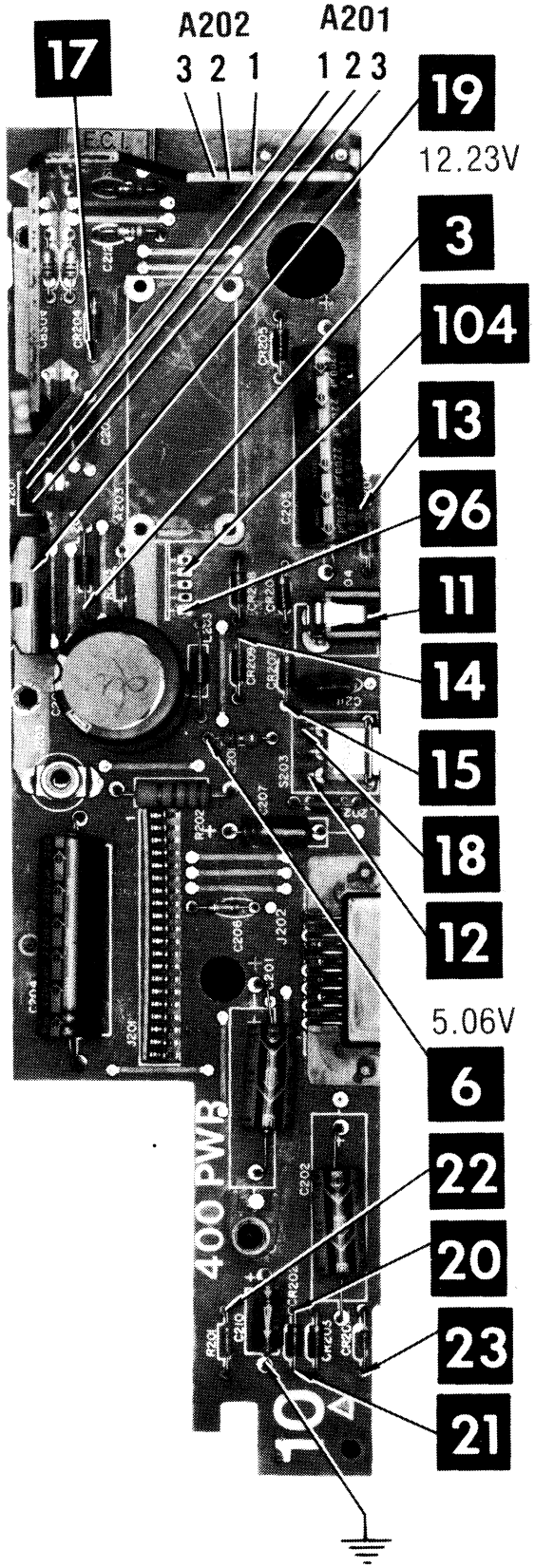

CC5
ATARI
MODEL 400

A Howard W. Sams GRIDTRACE™ Photo

A Howard W. Sams CIRCUITRACE® Photo

POWER BOARD

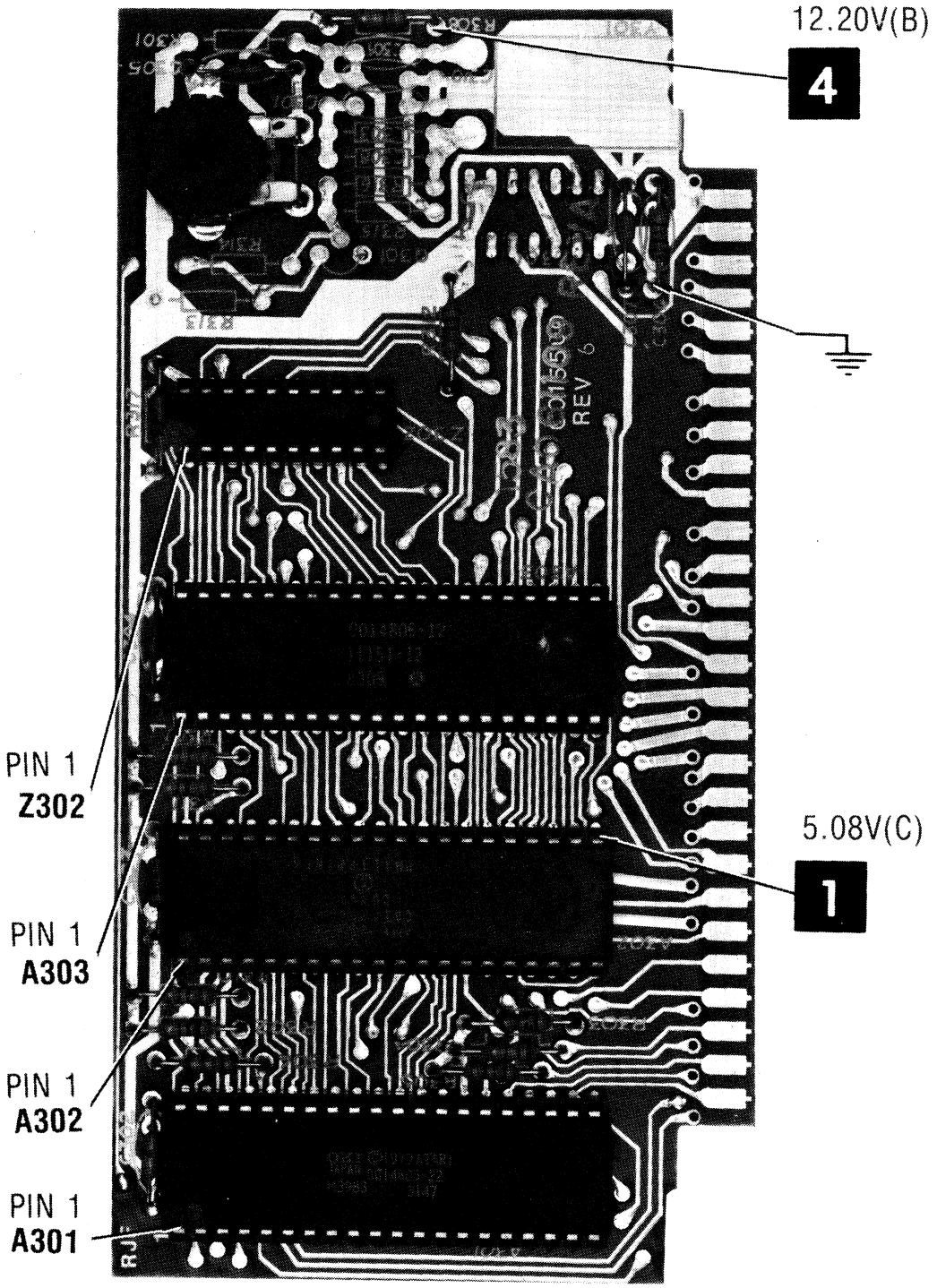

CPU BOARD A Howard W. Sams CIRCUITRACE® Photo

PARTS LIST AND DESCRIPTION

When ordering replacement parts, state Model, Part Number, and Description

SEMICONDUCTORS (Select replacement transistor for best results)

ITEM No.	TYPE No.	MFGR. PART No.	REPLACEMENT DATA						
			GENERAL ELECTRIC PART No.	MOTOROLA PART No.	NEW-TONE NTE PART No.	PHILIPS ECG PART No.	RCA PART No.	WORKMAN PART No.	ZENITH PART No.
A101		C012294B-01 (1)							
A102	P6520A	C014795(1)							
A103		C014599B-01 (1)							
A104		C012499B-01 (1)							
A105		C012399B(1)							
A111	CD4050BEXV		GE-4050	MC14050BCP	NTE4050B	ECG4050B	SK4050B		221-Z9163
	CD4050	C010816-XX (1)	GE-4050	MC14050BCP	NTE4050B	ECG4050B	SK4050B		221-Z9163
A201	UA78M12UC		GEVR-111	MC7812CT	NTE966	ECG966	SK3592/966	WEP966L/966	HE-442-674
	78M12		GEVR-111	MC7812CT	NTE966	ECG966	SK3592/966	WEP966L/966	HE-442-674
A202	7805		GEIC-190	MC7805CT	NTE960	ECG960	SK3591/960		221-Z9043
A204	LM3086N		GEIC-172	MC3346P	NTE912	ECG912	SK3543/912	WEP2104/912	221-Z9018
A301		C014805-22 (1)							
A302		C012296D-01 (1)							
A303	6502	C014806-12 (1)			NTE6502	ECG6502			
		C014377(1)			NTE6502	ECG6502			
CR101	4148		GE-514	1N4935	NTE519	ECG519	SK3100/519	WEP925/519	103-131
CR103	4148		GE-514	1N4935	NTE519	ECG519	SK3100/519	WEP925/519	103-131
CR201	1N5231B		GEZD-5.1	1N5231B	NTE5010A	ECG5010A	SK5A1/5010A	WEP1411/5010	103-279-10
CR202 thru CR209	1N5391			MR500	NTE5800	ECG5800	SK5010/117A	WEP4000/5800	212-Z9000
CR250	1N914		GE-300	1N4935	NTE177	ECG177	SK9091/177	WEP1062/177	103-131
Q101	MPSA06		GE-123AP	MPSA05	NTE123AP	ECG123AP	SK3854/123AP	WEP736/123A	121-Z9000A
Q102	MPSA55		GE-82	2N5401	NTE159	ECG159	SK3466/159	WEP62/159	121-Z9003
Q103,4	2N3906		GE-82	2N5401	NTE159	ECG159	SK3466/159	WEP62/159	121-Z9003
Q105	9018			MPS6543	NTE108	ECG108	SK3452/108	WEP56/108	121-925
	2N3563			MPS6543	NTE108	ECG108	SK3452/108	WEP56/108	121-925

PARTS LIST AND DESCRIPTION (Continued)

When ordering replacement parts, state Model, Part Number, and Description

SEMICONDUCTORS (Select replacement for best results) (cont)

ITEM No.	TYPE No.	MFGR. PART No.	REPLACEMENT DATA						
			GENERAL ELECTRIC PART No.	MOTOROLA PART No.	NEW-TONE NTE PART No.	PHILIPS ECG PART No.	RCA PART No.	WORKMAN PART No.	ZENITH PART No.
Q106	2N3906		GE-82	2N5401	NTE159	ECG159	SK3466/159	WEP62/159	121-Z9003
Q107	2N3904		GE-123AP	MPSA05	NTE123AP	ECG123AP	SK3854/123AP	WEP736/123A	121-Z9000A
Q203	2N3906		GE-82	2N5401	NTE159	ECG159	SK3466/159	WEP62/159	121-Z9003
Z101,2	CD4051BEXV		GE-4051	MC14051BCP	NTE4051B	ECG4051B	SK4051B		905-380
	CD4051	C014336(1)	GE-4051	MC14051BCP	NTE4051B	ECG4051B	SK4051B		905-380
Z103	SN74LS42NDS			SN74LS42N	NTE74LS42	ECG74LS42	SK74LS42		HE-443-807
	74LS42			SN74LS42N	NTE74LS42	ECG74LS42	SK74LS42		HE-443-807
Z104	DM74LS10N			SN74LS10N	NTE74LS10	ECG74LS10	SK74LS10		HE-443-797
	74LS10	C014341(1)		SN74LS10N	NTE74LS10	ECG74LS10	SK74LS10		HE-443-797
Z105	SN74LS138N			SN74LS138N	NTE74LS138	ECG74LS138	SK74LS138		HE-443-877
	74LS138	C014344(1)		SN74LS138N	NTE74LS138	ECG74LS138	SK74LS138		HE-443-877
Z302	74LS244N			SN74LS244N	NTE74LS244	ECG74LS244	SK74LS244		HE-443-791
Z501	SN74LS10NDS			SN74LS10N	NTE74LS10	ECG74LS10	SK74LS10		HE-443-797
	74LS10	C014341(1)		SN74LS10N	NTE74LS10	ECG74LS10	SK74LS10		HE-443-797
Z502	74LS244N			SN74LS244N	NTE74LS244	ECG74LS244	SK74LS244		HE-443-791
	74LS244	C014313(1)		SN74LS244N	NTE74LS244	ECG74LS244	SK74LS244		HE-443-791
Z503,4	DM74LS158N			SN74LS158N		ECG74LS158			
	74LS158	C014345(1)		SN74LS158N		ECG74LS158			
Z505 thru	MK4116N-3GP	C014331-09		MCM4116BP30					
Z512		(1)							

(1) Number on unit.

CAPACITORS

Item numbers not listed are normally available at local distributors.

ITEM No.	RATING	MFGR. PART No.
C177	820 3%	
C178	820 3%	
C183	47 NPO 50V 5%	
C187	10 NPO 50V 5%	
C193	68 NPO 50V 5%	
C194	47 NPO 50V 5%	

ITEM No.	RATING	MFGR. PART No.
C195	68 NPO 50V 5%	
C196	47 NPO 50V 5%	
C250	100 N750 50V	
C251	47 N150 50V	
C254	15 NPO 50V 5%	
C518	47 NPO 50V 5%	

PARTS LIST AND DESCRIPTION (Continued)

When ordering replacement parts, state Model, Part Number, and Description

CONTROLS (All wattages ½ watt, or less, unless listed)

ITEM NO.	FUNCTION	RESISTANCE	MFGR. PART NO.	NOTES
R309	Color Adjust	500K		

RESISTORS (Power and Special)

ITEM No.	RATING	REPLACEMENT DATA		
		MFGR. PART No.	WORKMAN PART No.	REMARKS
R150	Resistor Network (1)			
R159	Resistor Network (1)			

(1) Contains nine, 4700 5%.

COILS (RF-IF)

ITEM No.	FUNCTION	MFGR. PART No.
L101	4.5MHz Adjust	
L102	RF Choke	
L103	RF Choke	
L104	RF Choke	
L105	RF Choke	
L106	RF Choke	
L107	RF Choke	
L108	RF Choke	
L109	RF Choke	
L110	RF Choke	
L111	RF Choke	
L112	RF Choke	

ITEM No.	FUNCTION	MFGR. PART No.
L113	RF Choke	
L114	RF Choke	
L115A	RF Choke	
L115B	RF Choke	
L116	RF Choke	
L117	RF Choke	
L201	RF Choke	
L203	RF Choke	
L205	RF Choke	
L210	RF Adjust	
L501	RF Choke	
T250	RF Output	

SPEAKER

ITEM No.	TYPE	REPLACEMENT DATA		NOTES
		MFGR. PART No.	QUAM PART No.	
SP1	2" PM			

TRANSFORMER (Power)

ITEM No.	RATING			REPLACEMENT DATA		
	PRI.	SEC. 1	SEC. 2	MFGR. PART No.	THORDARSON PART No.	NOTES
T1	120VAC 145mAAC	10.42VAC 1AAC				

PARTS LIST AND DESCRIPTION (Continued)

When ordering replacement parts, state Model, Part Number, and Description

MISCELLANEOUS

ITEM No.	PART NAME	MFGR. PART No.	NOTES
CR210	LED		Power, Red (1.69V @ 16mA)
L202	Ferrite Bead		
L204	Ferrite Bead		
P1	Power Cord		AC
S201	Switch		Channel Select (2/3)
S202	Switch		Part of J204
S203	Switch		Power (On/Off)
X101	Crystal		3.579575MHz
	Keyboard		
	P.C. Board		CPU
	P.C. Board		Main
	P.C. Board		RAM
	P.C. Board		RF Modulator

CABINET & CABINET PARTS (When ordering specify model, chassis & color)

Shielded Hook-up Wire	Use BELDEN No.	8401 or 8421 (Single-Conductor) 8208 (Two-Conductor)
General-use Unshielded Hook-up Wire	Use BELDEN No.	8529 (Solid) Available in 13 Colors 8522 (Stranded) Available in 13 Colors
300-Ohm Input Lead	Use BELDEN No.	8225
75-Ohm Input Lead	Use BELDEN No.	8241

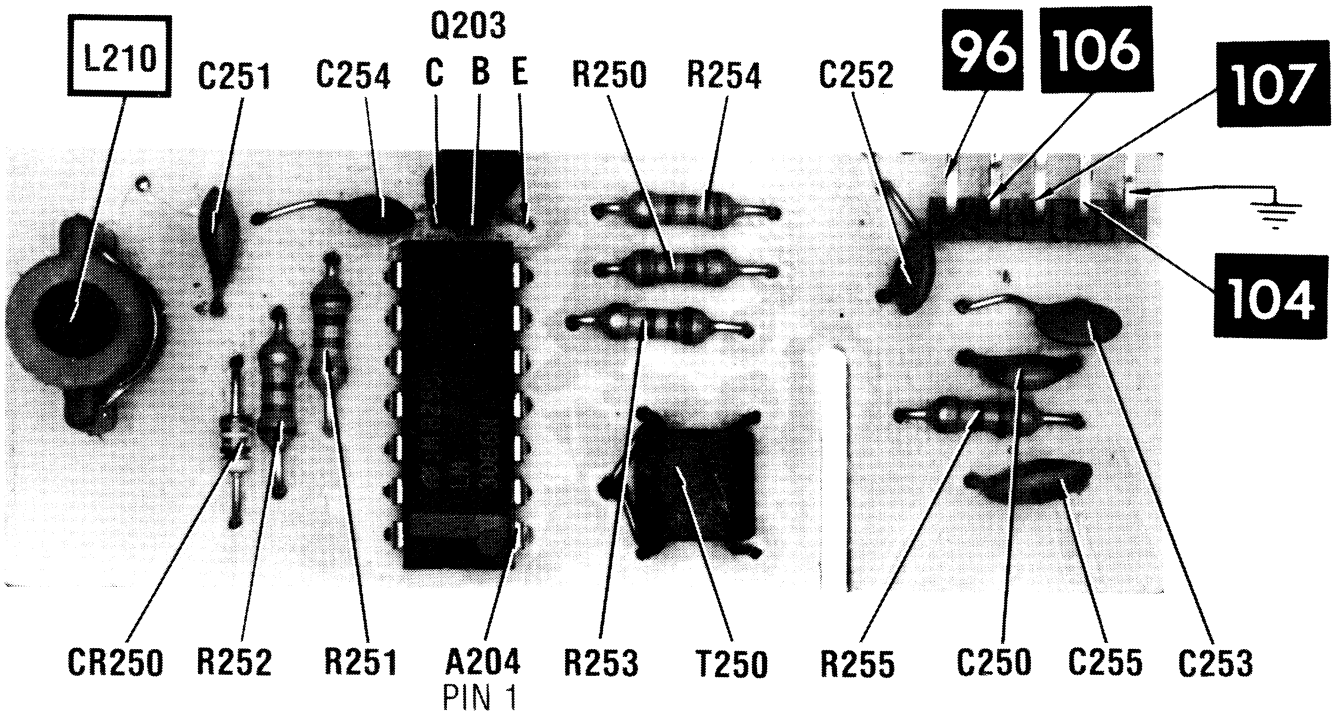

RF MODULATOR BOARD A Howard W. Sams CIRCUITRACE® Photo

CPU BOARD
GridTrace
LOCATION GUIDE

A301	N-3
A302	K-4
A303	H-4
C302	N-1
C303	K-1
C304	H-1
C305	A-2
C306	C-7
C307	C-6
R302	M-1
R303	L-5
R304	M-5
R305	M-5
R306	M-2
R307	I-1
R308	A-4
R309	B-1
R310	L-1
R311	J-1
R312	D-4
R317	E-1
Z302	E-2

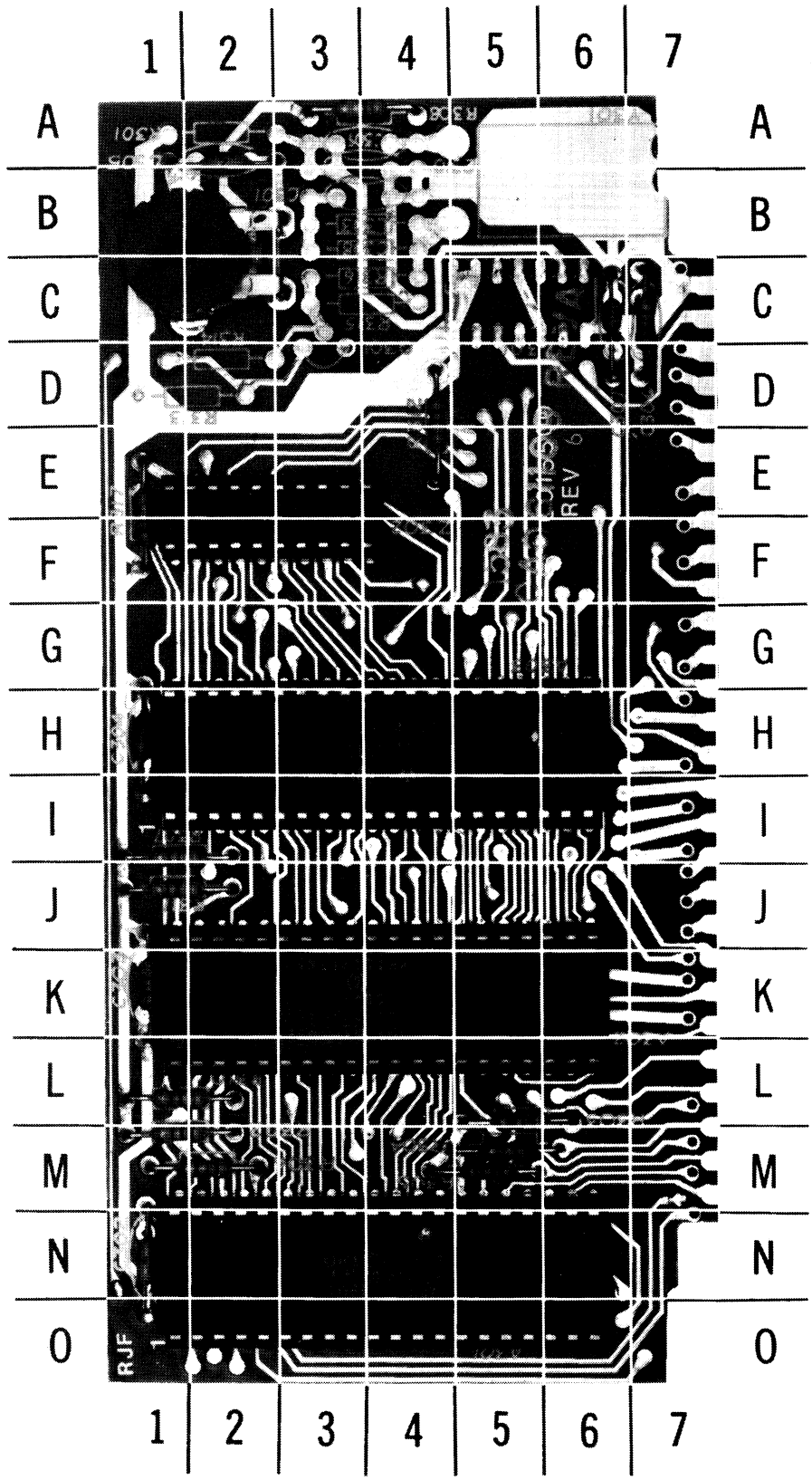

ATARI
MODEL 400

A Howard W. Sams GRIDTRACE™ Photo

CPU BOARD

MAIN BOARD GridTrace LOCATION GUIDE

A101	K-9	C143	F-4	C190	I-18	Q106	M-13	R146	I-6
A102	K-8	C144	F-4	C191	F-18	Q107	M-17	R147	I-6
A103	G-19	C145	F-4	C192	C-19	R101	O-8	R148	J-6
A104	E-19	C146	E-4	C193	A-18	R102	N-6	R149	J-6
A105	I-19	C147	D-4	C194	A-17	R103	M-9	R150	D-7
C100	G-18	C148	C-4	C195	A-17	R104	O-6	R151	D-6
C101	E-4	C149	C-4	C196	A-18	R105	M-9	R152	G-6
C102	H-4	C150	C-4	C197	E-13	R106	N-6	R153	G-6
C103	P-4	C151	L-4	C198	A-12	R107	M-8	R154	I-6
C104	R-6	C152	K-4	C199	A-11	R108	M-8	R155	A-21
C105	R-5	C153	K-4	C201	K-4	R109	M-6	R156	A-21
C106	O-4	C154	J-4	C202	A-8	R110	M-6	R157	H-20
C107	P-6	C155	G-4	CR101	B-4	R111	M-6	R158	A-21
C108	P-4	C156	G-4	CR103	N-20	R112	M-7	R159	H-9
C109	R-7	C157	G-4	J101	B-2	R113	K-6	R160	J-12
C110	P-4	C158	F-4	J102	F-2	R114	L-6	R161	K-11
C111	R-5	C159	J-4	J103	J-2	R115	L-6	R162	K-13
C112	P-4	C160	I-4	J104	N-2	R116	L-6	R163	M-11
C113	M-4	C161	H-4	J105	S-1	R117	O-6	R164	M-14
C114	M-4	C162	D-4	J106	A-3	R118	B-4	R165	M-12
C115	M-4	C163	C-21	J107	S-12	R119	O-7	R166	K-12
C116	M-4	C164	J-11	J108	F-16	R120	O-9	R167	M-11
C117	Q-4	C165	R-8	J109	J-20	R121	O-8	R168	O-12
C118	M-4	C166	R-10	J110	R-22	R122	O-8	R169	M-12
C119	N-4	C167	R-9	L101	K-13	R123	A-6	R170	O-11
C120	M-4	C168	R-9	L102	L-11	R124	G-10	R171	N-13
C121	C-4	C169	R-10	L103	O-11	R125	M-10	R172	N-17
C122	R-5	C170	R-10	L104	O-12	R126	C-6	R173	N-17
C123	R-6	C171	R-8	L105	P-6	R127	C-6	R174	N-18
C124	R-7	C172	R-8	L106	N-13	R128	G-6	R175	N-18
C125	Q-4	C173	R-12	L107	O-9	R129	H-6	R176	N-15
C127	L-4	C174	Q-4	L108	O-9	R130	H-6	R177	N-14
C128	L-4	C175	R-12	L109	O-10	R131	H-6	R178	N-14
C129	I-4	C176	R-11	L110	M-11	R132	K-6	R179	N-21
C130	I-4	C177	P-11	L111	M-10	R133	I-6	R180	N-14
C131	H-4	C178	K-11	L112	O-10	R134	B-6	R181	N-19
C132	H-4	C179	K-14	L113	M-10	R135	B-6	R182	N-19
C133	D-4	C180	M-12	L114	O-10	R136	B-6	R183	N-20
C134	D-4	C181	O-13	L115A	B-16	R137	C-6	R184	A-21
C135	J-8	C182	M-12	L115B	N-13	R138	D-6	R185	B-7
C136	J-8	C183	K-14	L116	B-16	R139	D-6	Z101	K-9
C137	I-8	C184	R-11	L117	A-16	R140	E-6	Z102	K-8
C138	I-8	C185	N-14	Q101	A-3	R141	E-6	Z103	G-19
C139	H-8	C186	N-17	Q102	G-9	R142	F-6	Z104	E-19
C140	H-8	C187	N-19	Q103	A-22	R143	F-6	Z105	I-19
C141	G-8	C188	N-15	Q104	A-22	R144	F-6		
C142	G-8	C189	N-20	Q105	K-12	R145	G-6		

POWER BOARD GridTrace LOCATION GUIDE

A201	E-1	C207	H-3	CR202	N-4	CR210	M-3	L204	E-4
A202	A-3	C208	A-4	CR203	N-4	J201	K-2	L205	F-1
C201	K-3	C209	G-2	CR204	C-1	J202	J-4	R201	N-3
C202	M-4	C210	N-3	CR205	C-3	J203	H-1	R202	H-2
C203	D-1	C211	G-4	CR206	F-3	J204	F-4	R203	F-2
C204	I-1	C212	B-2	CR207	G-4	L201	G-3	S201	A-1
C205	D-4	C213	B-1	CR208	F-3	L202	H-4	S202	F-4
C206	I-3	CR201	N-4	CR209	G-3	L203	G-3	S203	H-4

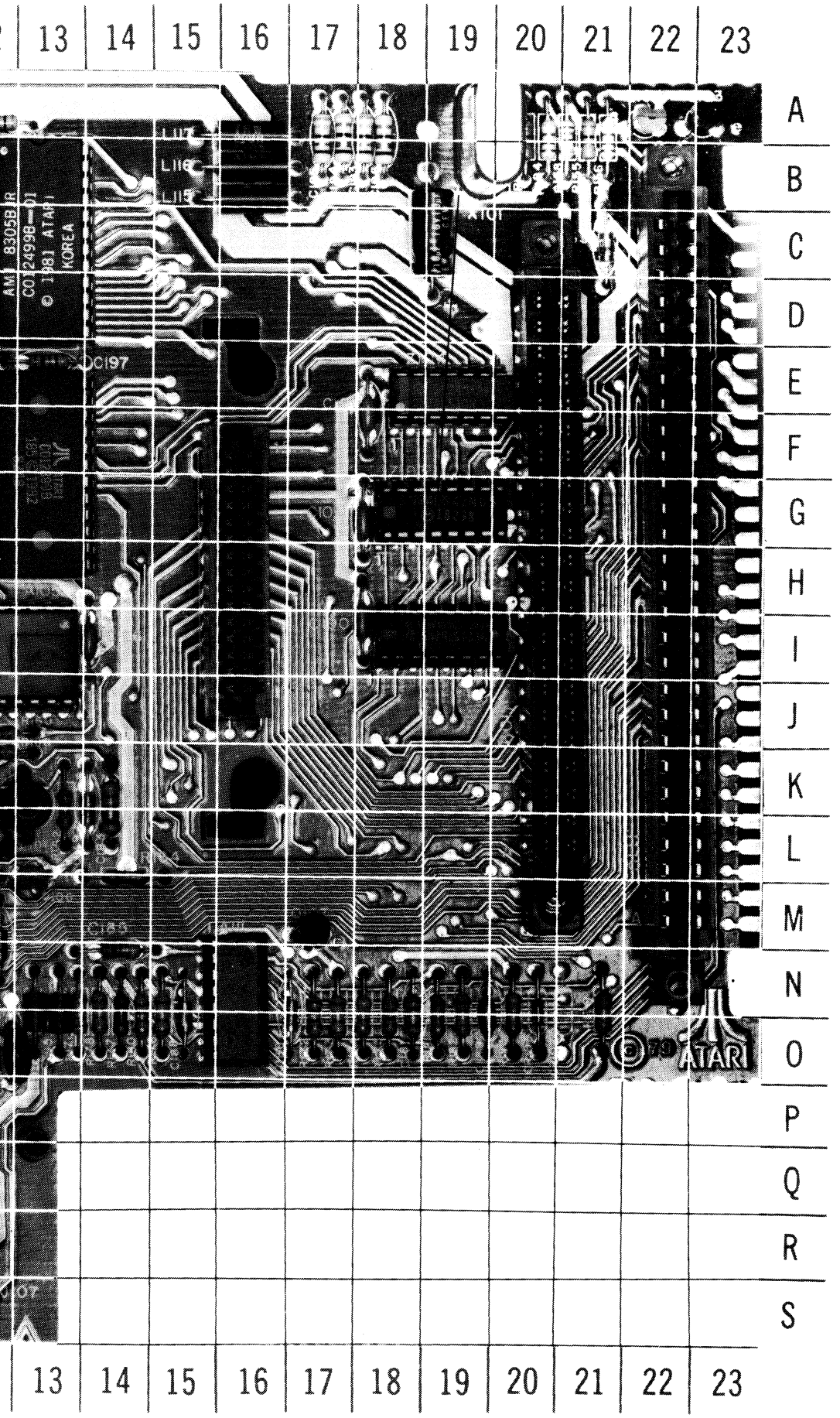

ATARI
MODEL 400

MAIN BOARD

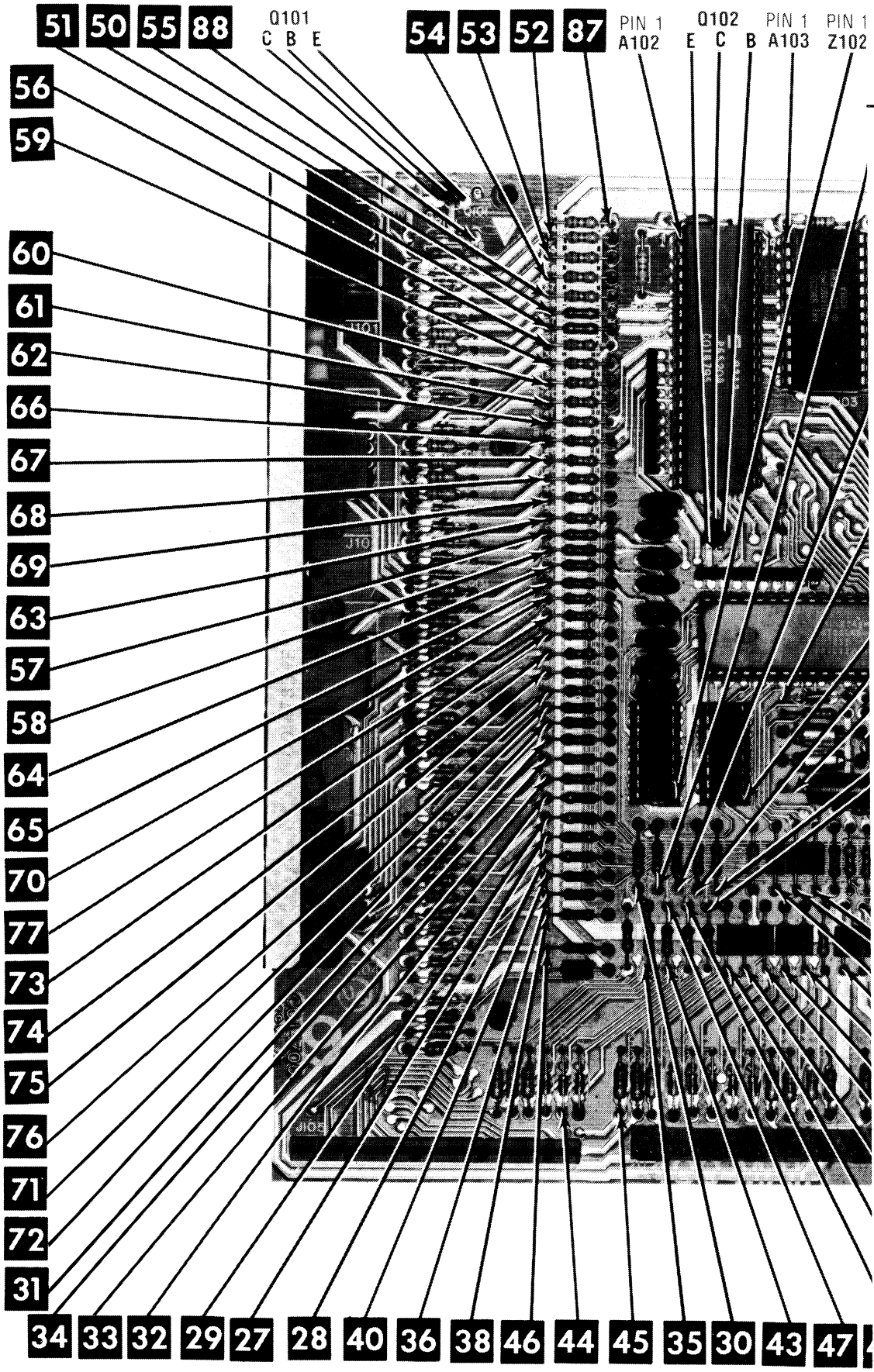
51
50
55
88
Q101
C B E
54
53
52
87
PIN 1
A102
Q102
E C B
PIN 1
A103
PIN 1
Z102
56
59
60
61
62
66
67
68
69
63
57
58
64
65
70
77
73
74
75
76
71
72
31
34
33
32
29
27
28
40
36
38
46
44
45
35
30
43
47

MAIN BOARD

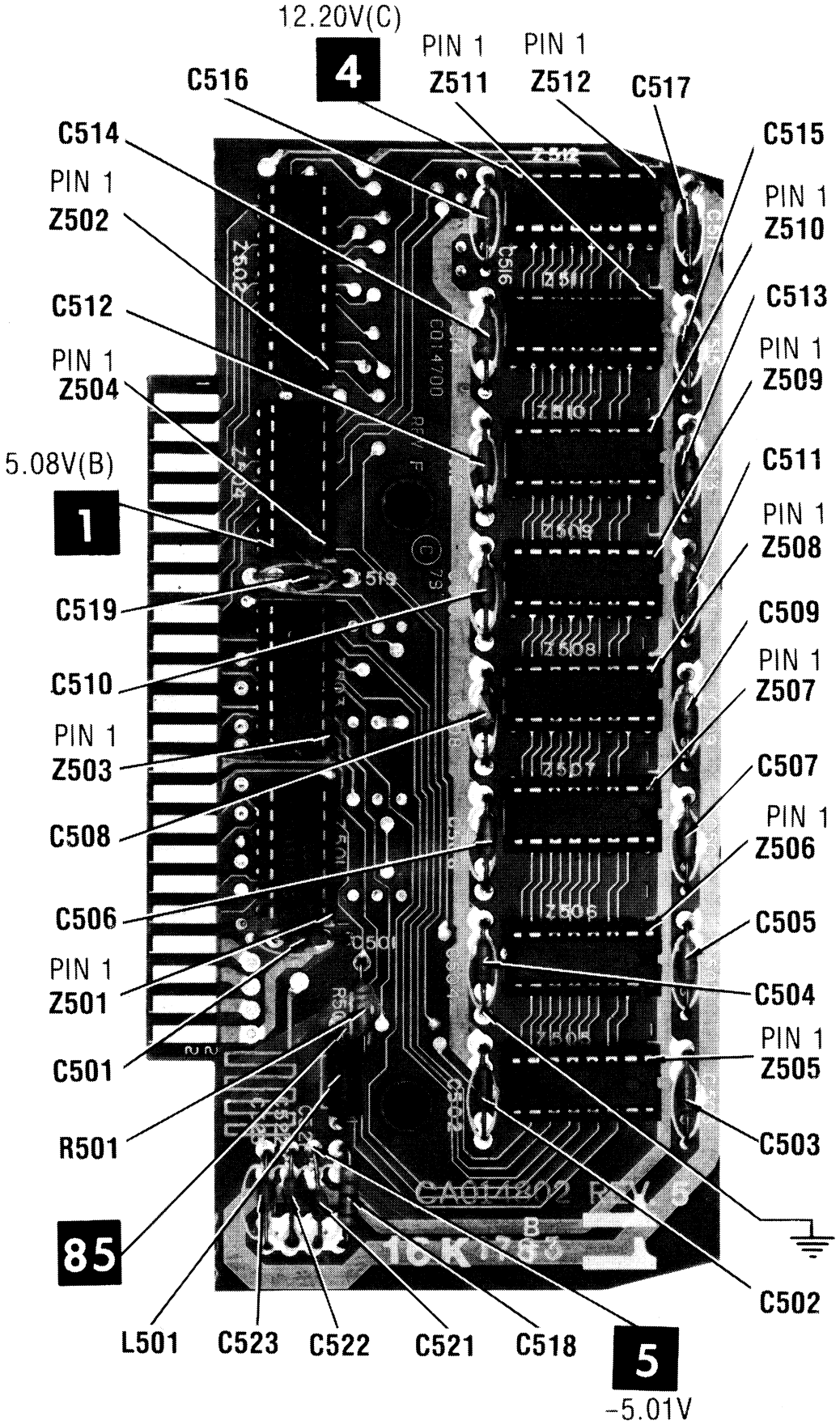

ATARI
MODEL 400

A Howard W. Sams CIRCUITRACE® Photo

16K RAM BOARD

SCHEMATIC & LOGIC CHART NOTES

—⋇— Circuitry not used in some versions
--- Circuitry used in some versions
⊖ See parts list
⏚ Ground

Voltages and waveforms taken with computer in Power Up mode with Basic cartridge plugged in and no keys pressed unless otherwise noted. Waveforms taken with triggered scope and Sweep/Time switch in Calibrate position, scope input set for DC coupling on "0" reference voltage waveforms. Switch to AC Input to view waveforms after DC reference is measured when necessary. Each waveform is 7.5 cm width with DC reference voltage given at the bottom line of each waveform. Time in μsec. per cm, given with p-p reading at the end of each waveform.

Waveforms and voltages are taken from ground, unless noted otherwise.

Item numbers in rectangles appear in the alignment/adjustment instructions.

Supply voltages maintained as shown at input.

Voltages measured with digital meter.

Controls adjusted for normal operation.

Terminal identification may not be found on unit.

Capacitors are 50 volts or less, 5% unless noted.

Electrolytic capacitors are 50 volts or less, 20% unless noted.

Resistors are ½W or less, 5% unless noted.

Value in ( ) used in some versions.

Measurements with switching as shown, unless noted.

NOTE: Logic probe readings taken with computer in Power Up mode with Basic cartridge plugged in and no keys pressed unless otherwise noted.

Logic Probe Display
L = Low
H = High
P = Pulse
* = Open (No light On)

(1) Use the following chart to determine which keys produce pulses for the pin given.

Z101 PIN	KEYS
1	6, 7, Y, U, N
2	H, J, SPACE
3	All keys except BREAK, CTRL and SHIFT
4	4, 9, R, O, F, L, V, ,
5	3, 0, E, P, D, ;, C, .
12	ESC, BACKS, TAB, RETURN, LOWR
13	1, >, Q, =, A, *, Z, ATARI
14	2, <, W, –, S, +, X, /
15	5, 8, T, I, G, K, B, M

Z102 PIN	KEYS
1	ESC, 1, 2, 3, 4, 5, 6
2	U, I, O, P, –, =, RETURN
4	J, K, L, ;, +, *, CTRL
5	SHIFT, Z, X, C, V, B
12	N, M, ,, ., /, ATARI, SPACE
13	A, S, D, F, G, H, LOWR
14	BREAK, 7, 8, 9, 0, <, >, BACKS
15	TAB, Q, W, E, R, T, Y

(2) Probe will show P with paddles connected to Port 4.
(3) Probe will show P with paddles connected to Port 3.
(4) Probe will show P with paddles connected to Port 2.
(5) Probe will show P with paddles connected to Port 1.
(6) Probe will show L when paddle trigger is pressed. Use the following chart to determine which pin is affected by each paddle trigger.

PADDLE TRIGGER	A102 PIN
0	4
1	5
2	8
3	9
4	12
5	13
6	16
7	17

(7) Probe will show L when joystick is used. Use the following chart to determine which pin is affected by each joystick function.

JOYSTICK	PORT 1 IC PIN	PORT 2 IC PIN	PORT 3 IC PIN	PORT 4 IC PIN
UP	A102 2	A102 6	A102 10	A102 14
DOWN	A102 3	A102 7	A102 11	A102 15
LEFT	A102 4	A102 8	A102 12	A102 16
RIGHT	A102 5	A102 9	A102 13	A102 17
BUTTON	A301 8	A301 9	A301 10	A301 11

(8) Probe will show P when loading program from tape.
(9) Probe will show P when saving program to tape.
(10) Probe will show L when saving or loading program to or from tape.
(11) Probe will show P when the internal speaker is used.
(12) Probe will show P when any key except BREAK, CTRL and SHIFT is pressed.
(13) Probe will show P when BREAK, CTRL or SHIFT key is pressed.
(14) Probe will show one P when any key except SHIFT or CTRL is pressed.
(15) Probe will show L when START key is pressed.
(16) Probe will show L when SELECT key is pressed.
(17) Probe will show L when OPTION key is pressed.
(18) Probe will show L when SYSTEM RESET key is pressed.

LOGIC CHART

PIN NO.	IC A101	PIN NO.	IC A101	PIN NO.	IC A102	PIN NO.	IC A102	PIN NO.	IC A103	IC A104	IC A105	IC A111
1	L	21	P	1	L	21	P	1	P	P	P	H
2	P	22	P	2	H	22	H	2	P	P	P	P
3	P	23	P	3	H(7)	23	P	3	P	P	P	P
4	P	24	H(8)	4	H(6,7)	24	H	4	P	P	P	P
5	P	25	H(1,12)	5	H(6,7)	25	P	5	P	P	P	P
6	P	26	H(9)	6	H(7)	26	P	6	P	P	P	P
7	P	27	H(9)	7	H(7)	27	P	7	P	P	P	P
8	L(2)	28	H(9)	8	H(6,7)	28	P	8	P	P	P	L
9	L(2)	29	H(14)	9	H(6,7)	29	P	9	P	P	P	P
10	L(3)	30	P	10	H(7)	30	P	10	P	P	P	P
11	L(3)	31	H	11	H(7)	31	P	11	P	P	P	P
12	L(4)	32	P	12	H(6,7)	32	P	12	L	L	L	P
13	L(4)	33	P	13	H(6,7)	33	P	13	P	P	P	*
14	L(5)	34	P	14	H(7)	34	H	14	P	P	P	H
15	L(5)	35	P	15	H(7)	35	P	15	P	P	P	H
16	H(13)	36	P	16	H(6,7)	36	P	16	P	P	P	*
17	H	37	H	17	H(6,7)	37	H(14)	17	P	P	P	
18	P	38	P	18	H(10)	38	H(14)	18	P	P	P	
19	P	39	P	19	H	39	H(10)	19	P	P	P	
20	P	40	P	20	H	40	H	20	P	P	P	
								21	P	P	P	
								22	P	P	P	
								23	P	P	P	
								24	H	H	H	

PIN NO.	IC A301	PIN NO.	IC A301	PIN NO.	IC A302	PIN NO.	IC A302	PIN NO.	IC A303	PIN NO.	IC A303
1	P	21	P	1	L	21	H	1	L	21	L
2	P	22	P	2	P	22	P	2	H	22	P
3	L	23	P	3	P	23	P	3	P	23	P
4	P	24	P	4	H(7)	24	P	4	H(14)	24	P
5	P	25	P	5	P	25	P	5	*	25	P
6	P	26	P	6	H(18)	26	P	6	P	26	P
7	P	27	H	7	P	27	P	7	P	27	P
8	H(7)	28	P	8	P	28	P	8	H	28	P
9	H(7)	29	P	9	P	29	P	9	P	29	P
10	H(7)	30	P	10	P	30	P	10	P	30	P
11	H(7)	31	P	11	P	31	P	11	P	31	P
12	H(12,15)	32	P	12	P	32	P	12	P	32	P
13	H(12,16)	33	P	13	P	33	P	13	P	33	P
14	H(12,17)	34	P	14	P	34	P	14	P	34	*
15	L(11)	35	P	15	H	35	P	15	P	35	P
16	*	36	P	16	P	36	H	16	P	36	P
17	H	37	P	17	P	37	P	17	P	37	P
18	P	38	P	18	P	38	P	18	P	38	L
19	P	39	P	19	P	39	P	19	P	39	P
20	P	40	P	20	P	40	P	20	P	40	H

SEE SCHEMATIC & LOGIC CHART NOTES ON PAGE 22

LOGIC CHART (Continued)

PIN NO.	IC Z101	IC Z102	IC Z103	IC Z104	IC Z105	IC Z302	IC Z501	IC Z502	IC Z503
1	H(1)	L(1)	P	P	P	L	P	P	P
2	H(1)	L(1)	P	P	P	P	P	P	P
3	H(1,12)	L	H	H	P	P	P	P	P
4	H(1)	L(1)	H	H	P	P	P	P	P
5	H(1)	L(1)	H	P	P	P	P	P	P
6	L	L	H	P	P	P	P	P	P
7	L	L	P	L	H	P	L	P	P
8	L	L	L	P	L	P	P	P	L
9	P	P	P	P	H	P	P	P	P
10	P	P	H	P	H	L	P	L	P
11	P	P	H	H	P	P	P	P	P
12	H(1)	L(1)	L	P	P	P	P	P	P
13	H(1)	L(1)	P	P	P	P	P	P	P
14	H(1)	L(1)	P	H	H	P	H	P	P
15	H(1)	L(1)	P		P	P		P	L
16	H	H	H		H	P		P	H
17						P		P	
18						P		P	
19						L		P	
20						H		H	

PIN NO.	IC Z504	IC Z505	IC Z506	IC Z507	IC Z508	IC Z509	IC Z510	IC Z511	IC Z512
1	P	L	L	L	L	L	L	L	L
2	P	P	P	P	P	P	P	P	P
3	P	P	P	P	P	P	P	P	P
4	P	P	P	P	P	P	P	P	P
5	P	P	P	P	P	P	P	P	P
6	P	P	P	P	P	P	P	P	P
7	P	P	P	P	P	P	P	P	P
8	L	H	H	H	H	H	H	H	H
9	P	H	H	H	H	H	H	H	H
10	L	P	P	P	P	P	P	P	P
11	P	P	P	P	P	P	P	P	P
12	P	P	P	P	P	P	P	P	P
13	P	P	P	P	P	P	P	P	P
14	P	P	P	P	P	P	P	P	P
15	L	P	P	P	P	P	P	P	P
16	H	L	L	L	L	L	L	L	L

SEE SCHEMATIC & LOGIC CHART NOTES ON PAGE 22

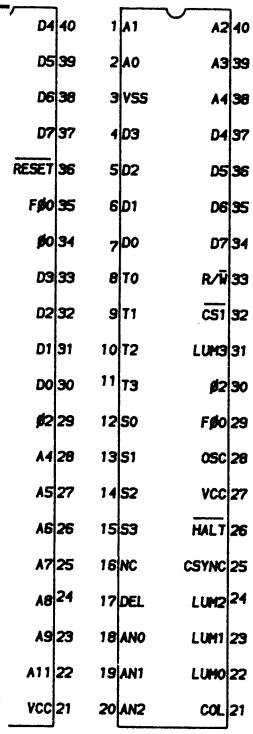

A301
GTIA
TOP VIEW

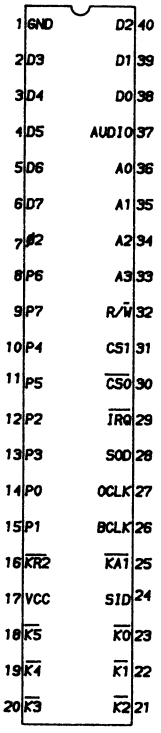

A101
POKEY
TOP VIEW

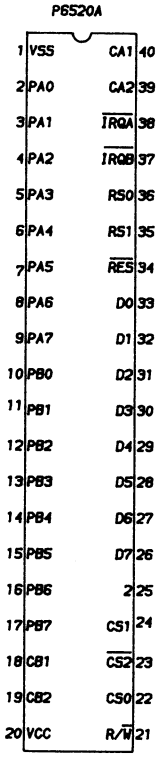

A102
PIA
TOP VIEW

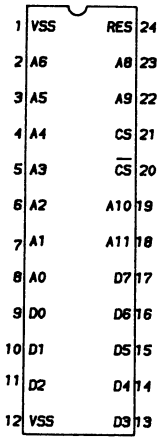

A103 THRU A105
ROM
TOP VIEW

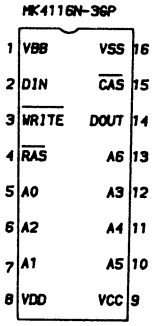

Z505 THRU Z512
RAM
TOP VIEW

ATARI
MODEL 400

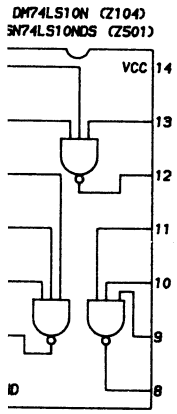

Z104, Z501
.INE TO 8 LINE
MULTIPLEXER
TOP VIEW

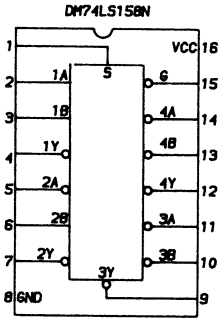

Z503, Z504
QUADRUPLE
2 LINE TO 1 LINE
DATA SELECTORS/MULTIPLEXERS
TOP VIEW

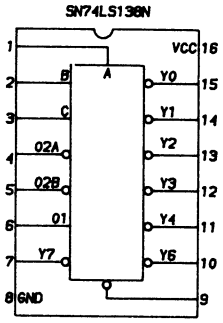

Z105
3 LINE TO 8 LINE
MULTIPLEXER
TOP VIEW

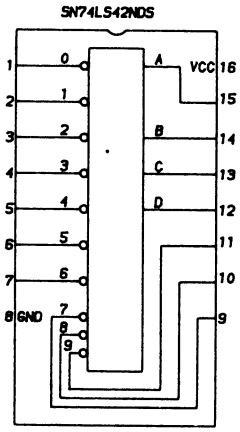

Z103
4 LINE TO 10 LINE
BCD TO DECIMAL DECODER
TOP VIEW

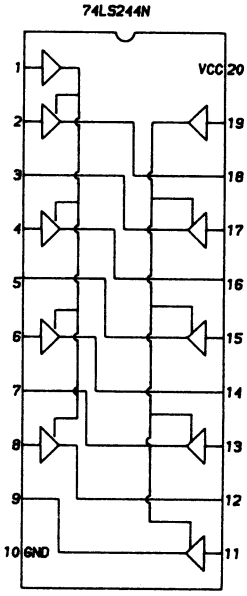

Z302, Z502
THREE STATE BUFFER
TOP VIEW

LINE DEFINITIONS

A0 THRU A15 ..... Address Lines
AUD ..... Audio
APOT (1) THRU APOT (4) .... A Potentiometer (Port 1 Thru 4)
B CLOCK ..... Clock B
BPOT (1) THRU BPOT (4) .... B Potentiometer (Port 1 Thru 4)
CA1 ..... Chip Enable
CA2 ..... Chip Enable
CB1 ..... Chip Enable
CB2 ..... Chip Enable
CS ..... Chip Select
CS0 ..... Chip Select
CS1 ..... Chip Select
CS2 ..... Chip Select
D0 THRU D7 ..... Data Lines
DOWN (1) THRU DOWN (4) ... Joystick Down (Port 1 Thru 4)
E1/E2 ..... Enable
HALT ..... Halt
IRQ ..... Interrupt Request
LEFT (1) THRU LEFT (4) ..... Joystick Left (Port 1 Thru 4)
MBA0 THRU MBA15 ..... Mother Board Address Lines
MBD0 THRU MBD7 ..... Mother Board Data Lines
NMI ..... Non Maskable Interrupt
RAS ..... Row Address Strobe
RAS TIME ..... Row Address Strobe Timing
RDY ..... Ready
REF ..... Refresh
RESET ..... Reset
RIGHT (1) THRU RIGHT (4) .... Joystick Right (Port 1 Thru 4)
RNMI ..... Read Non Maskable Interrupt
R/W ..... Read/Write
R/W LATE ..... Read/Write Late
S0 ..... Select 0
S1 ..... Select One
S2 ..... Select Two
S3 ..... Select Three
SID ..... Serial Input Data
SOD ..... Serial Output Data
T0 ..... Joystick Trigger (Port 1)
T1 ..... Joystick Trigger (Port 2)
T2 ..... Joystick Trigger (Port 3)
T3 ..... Joystick Trigger (Port 4)
UP (1) THRU UP (4) ..... Joystick Up (Port 1 Thru 4)
0 CLOCK ..... Clock 0
Ø0 ..... Phase 0
Ø1 ..... Phase One
Ø2(A) ..... Phase Two
Ø2(B) ..... Phase Two

Any Bar above any alphabetical or numerical combination indicates line active in a low (0) state.

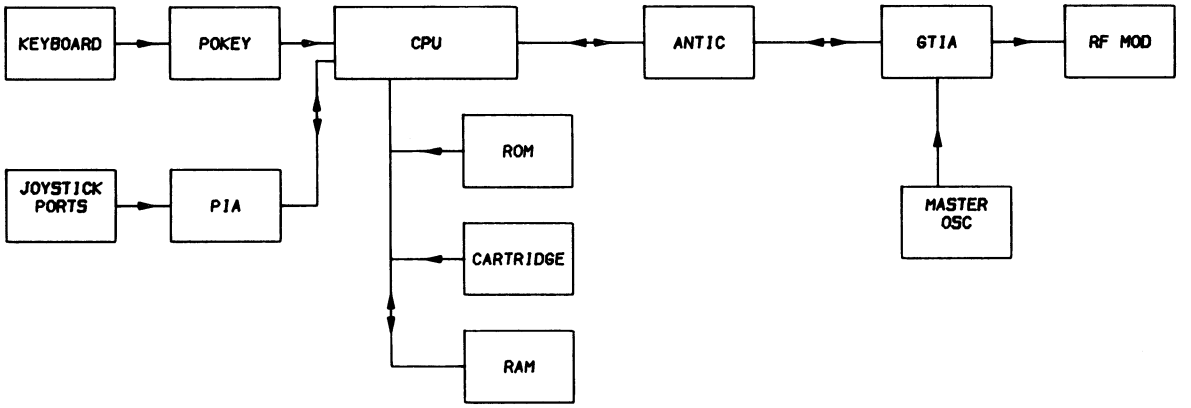

BLOCK DIAGRAM

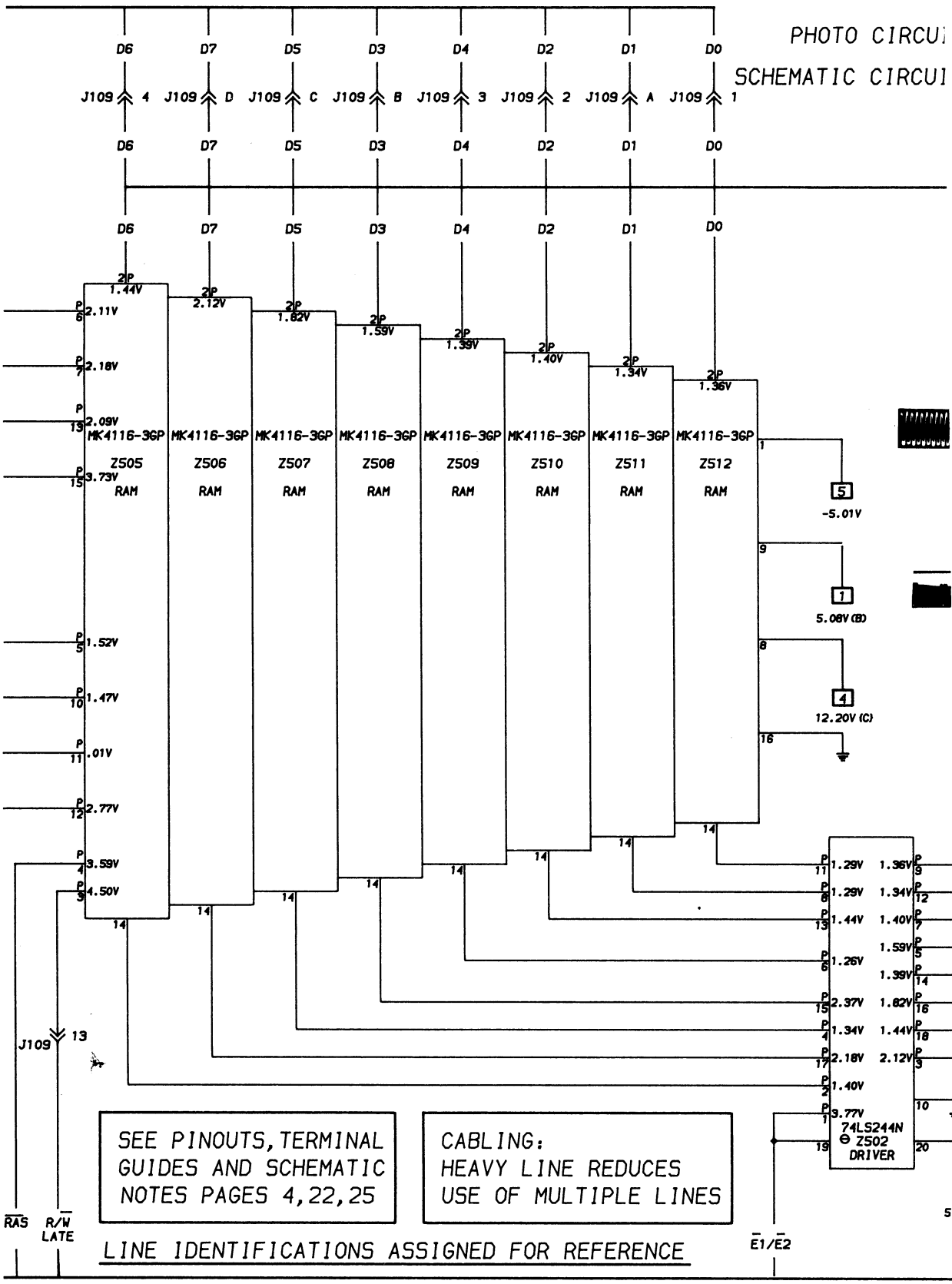

A PHOTOFACT STANDARD NOTATION SCHEMATIC WITH CIRCUITRACE™

© Howard W. Sams & Co., Inc. 1984

MAIN BOARD, CPU BOARD, 16K RAM BOARD & RF MODULA

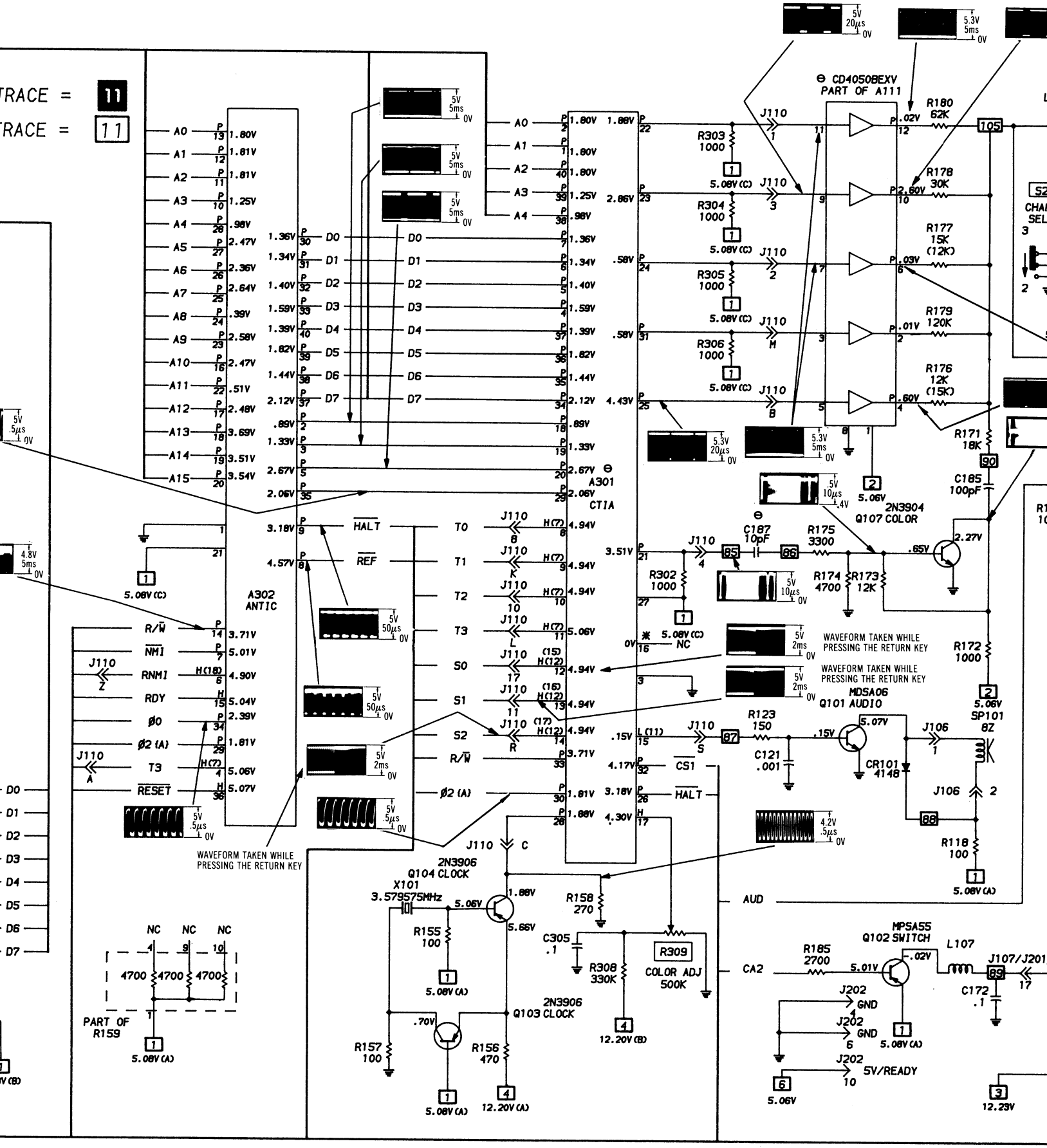

OR BOARD

SEE LINE DEFINITIONS ON PAGE 26

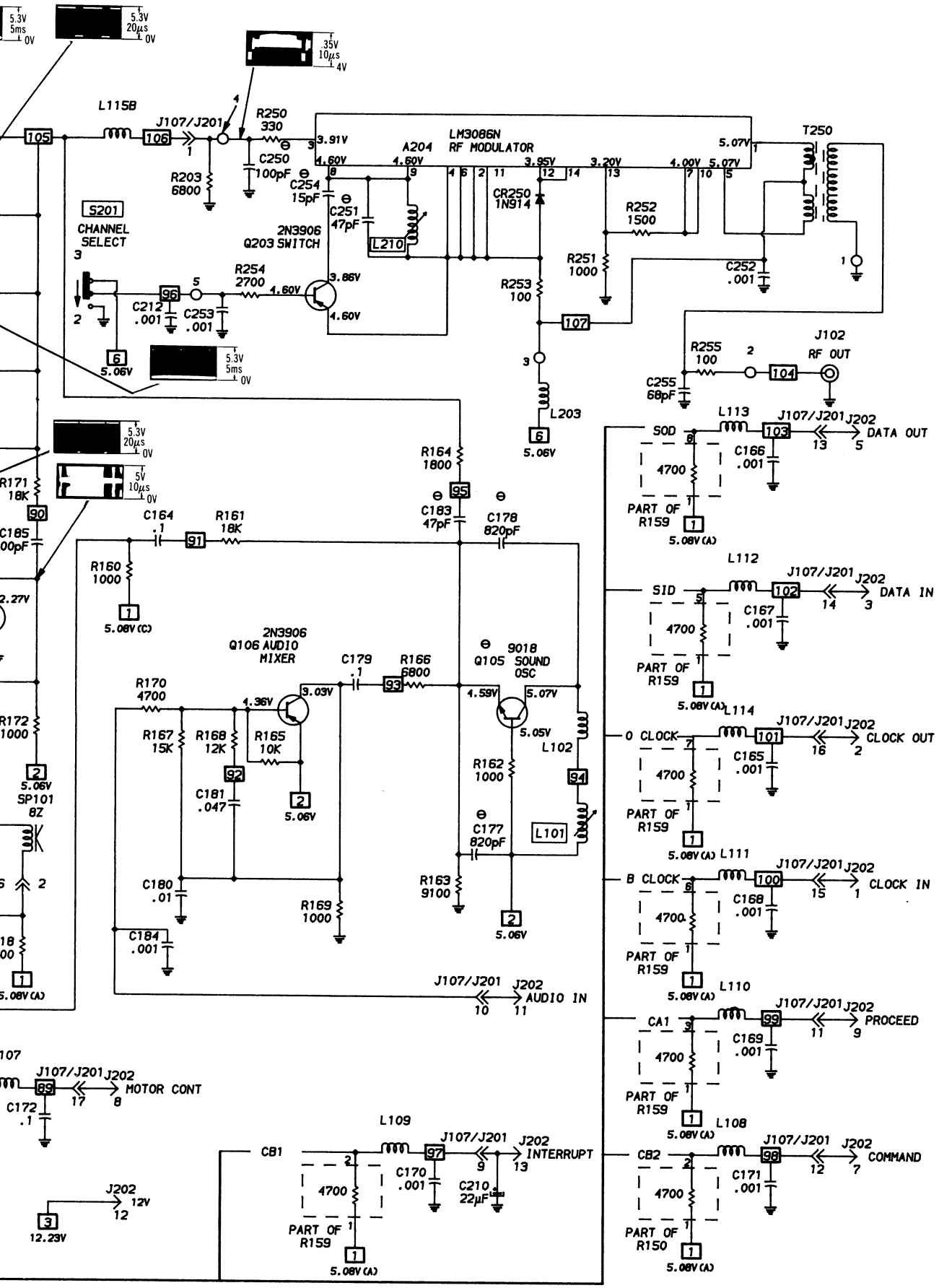

MAIN BOARD, CPU BOARD, 16K RAM BOARD & RF MODULATOR BOARD

ATARI MODEL 400

ATARI 400

CC5

If seal is broken, nonreturnable.

SAMS

COMPUTERFACTS™ put easy to use, informative technical data right at your fingertips. Each edition includes specific service information on the individual component, along with some overall troubleshooting hints.

The following information is just a sample of the many valuable time saving features contained in this exclusive Sams COMPUTERFACTS publication:

- Preliminary Service Checks section is an easy to use, step by step guide for the experienced technician or hobbyist, and even beginners.
- SAMS famous industry accepted standardized notation schematics containing CIRCUITRACE®, GRIDTRACE™, waveforms, voltages and stage identification.

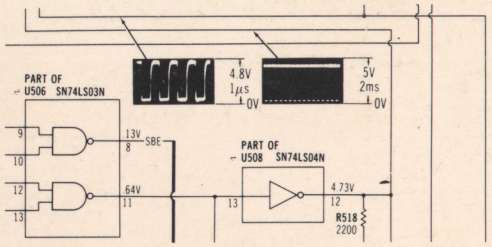

- Step by Step Troubleshooting guides the technician through the necessary procedures to quickly locate the problem.

TROUBLESHOOTING

MICROPROCESSOR CHIP (CPU) OPERATION

Verify the processor is functioning by checking the signals on the address lines (pins 10 thru 24 of IC U600) and the data lines (pins 41 thru 56) using a logic probe or a scope. If a logic probe is used, refer to the "Logic Chart" for the correct readings. If a scope is used, the waveforms on the address lines (except pins 22 and 23 which have no signal in Power Up mode) should be similar to Figure 1. The waveforms on the data lines should be similar to Figure 2.

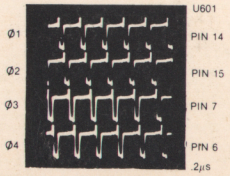

- Complete Components Parts List in an easy to use format with field replacements shown when possible. SAMS unique semiconductor, chip and IC cross-reference gives you many replacements to choose from and is available at your Electronic Distributor.

SEMICONDUCTORS (Select replacement for best results)

ITEM No.	TYPE No.	MFGR. PART No.	REPLACEMENT DATA						
			ECG PART No.	GENERAL ELECTRIC PART No.	MOTOROLA PART No.	NTE PART No.	RCA PART No.	WORKMAN PART No.	ZENITH PART No.
D102	1SS53	1149-2576	ECG519	GE-514	1N4935	NTE519	SK9091/177	WEP925/519	103-131
D103	1N60FM	1149-2527	ECG109	1N60		NTE109	SK3088	WEP134/109	103-Z9001
D201	1N4004GP	1201-4205	ECG116	GE-504A	1N4004	NTE116	SK3312	WEP157	212-76-02
D501 thru D503	1SS53	1149-2576	ECG519	GE-514	1N4935	NTE519	SK9091/177	WEP925/519	103-131

- Quick Component Location using the SAMS exclusive GRIDTRACE, CIRCUITRACE, and component photographs.

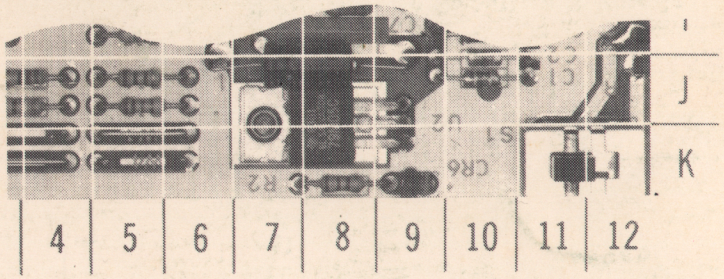

- Logic Chart containing logic probe readings to isolate defective circuitry and components.

LOGIC

PIN NO.	IC U100	PIN NO.	IC U100	PIN NO.	IC U102	IC U103	IC U104	IC U105	IC U106	IC U107	IC U108	IC U109
1	P	21	P	1	L	L	L	L	L	L	L	L
2	P	22	P	2	P	P	P	P	P	P	P	P
3	P	23	P	3	H	H	H	H	H	H	H	H

CIRCUITRACE is a registered trademark of Howard W. Sams & Co., Inc.
COMPUTERFACTS and GRIDTRACE are trademarks of Howard W. Sams & Co., Inc.
ATARI 400 is a trademark of Atari Inc., a Warner Communications Company.

To order, see your Sams Representative, or telephone 800-428-SAMS.

SAMS™
Howard W. Sams & Co., Inc.
4300 West 62nd Street, P.O. Box 7092, Indianapolis, Indiana 46206 U.S.A.

CC5
08911

ITT